持续高效地向全球客户
提供最具竞争力的供应链解决方案！

Continuously and Efficiently Deliver the Most Competitive Supply Chain Solutions to Global Customers!

官方网站
Official Website

微信公众号
WeChat Public Account

总部

地址：广东省东莞市塘厦镇凤凰岗升威工业园

服务热线：(+86) 0769 3883 3333

传真：(+86) 0769 87930111

邮箱：sw@soundwell.cn

网址：www.soundwell.cn

Headquarters

Address: Soundwell Industrial Park, Fenghuanggang, Tangxia Town, Dongguan City, Guangdong Province, China

Hotline: (+86) 0769 3883 3333

Fax: (+86) 0769 87930111

Mail: sw@soundwell.cn

Web: www.soundwell.cn

香港

地址：香港观塘开源道六十四号源成中心 11 楼 05 室

服务热线：(+852) 2796 6770

传真：(+852) 2753 0400

邮箱：sw@soundwell.cn

网址：www.soundwell.cn

Hong Kong

Address: Room 5, 11/F, Yen Sheng Centre, 64 Hoi Yuen Rd, Kwun Tong, Kowloon, Hong Kong

Hotline: (+852) 2796 6770

Fax: (+852) 2753 0400

Mail: sw@soundwell.cn

Web: www.soundwell.cn

升威电子：编码器 电位器 传感器 开关 集成模组 | 20版 2024

Soundwell Electronic| Version 20,2024

SOUNDWELL®

广东升威电子制品有限公司
SOUNDWELL ELECTRONIC PRODUCTS GUANGDONG CO., LTD

SOUNDWELL® Founded in

成立于1991年

1991

30+ 年专业技术铸就行业标杆

Set industry benchmark with 30+ years' professional technology and experience

编码器、电位器、传感器、开关、集成模组

Encoders, Potentiometers, Sensors, Switches, Integrated modules

国家标准制定单位

A National Standards Compiling Manufacturer

公司是电位器国家标准制定单位，编码器行业标准制定单位，项目经验、产研能力行业领先。

专业设计制造编码器、电位器、传感器、开关、集成模组。

产业应用于汽车电子、白色家电、黑色家电、智能家居、电子机械设备、智能办公设备、智能穿戴、影音设备、智慧医疗等领域。

Soundwell is the compiling manufacturer of Chinese national standards for potentiometers and industrial standards for encoders. It is leading the industry with its rich project experience and strong production and research capabilities.

Specializing in: Encoders, Potentiometers, Sensors, Switches, Integrated modules

Product application: Automotive electronics, white goods, black goods, smart home, industrial equipment, smart office equipment, smart wear, audio and video equipment, smart medical equipment and other fields.

70,000 +

产品种类已达七万多种规格

Offers a wide variety of products with a total selection of over 70,000 specifications

142 million HKD

注册资金：1.42亿港币

Registered capital: 142 million HKD

60,000 m^2

建筑面积：6万平米

Construction area : 60,000 square meters

走进升威 从专业开始

Start Now and Benefit From Our Professional Service

香港
HK

升威电子元件有限公司
Soundwell Electronic Components Co.,Ltd

广东
GD

广东升威电子制品有限公司
Soundwell Electronic Products
Guangdong Co., Ltd

广西
GX

贵港市港达电子有限公司
Guigang Gangda Electronics Co., Ltd

贵港昇威智能电子有限公司
Guigang Soundwell Intelligent
Electronics Co., Ltd

Products Index
产品目录

编码器 ENCODER

电位器 POTENTIOMETER

Products Series Code Explanation
INCREMENTAL ENCODER

Incremental type Encoder Series Code Explanation
增量型编码器型号说明

(1) (2) (3) (4) (5) (6) (7) (8) (9) (10) (11) (12) (13) (14) (15)

EC 12 11 02 X 2 B-HA1-000(24P 5-FA 200 B 120)

- Series 系列
- Size 外形尺寸
- Design Code 设计代号
- Flow NO.流水号
- Bushing 轴套
- Output signal format 输出信号形式
- Detents 定位数
- Pulses 脉冲数
- Flow Code 电脑流水号
- Terminal 端子
- Bracket 支架

(1)&(2) ： Series & Size / 系列及外形尺寸。

SERIES 系列	EXPLANATION 型号说明	SIZE / 外形尺寸（mm/毫米）																			
		04	05	06	09	10	11	12	16	18	21	25	28	33	35	40	43	50	56	60	65
EC	ENCODER TYPE 数码式	◉	◉	◉	◉	◉	◉	◉	◉	◉	◉	◉	◉	◉	◉	◉	◉	◉	◉	◉	◉

(3)&(4)&(5)&(7)：Design Code & Flow NO. & Bushing & Bracket Code are controlled by SOUNDWELL.
设计代号、流水号、轴套及支架代号由本公司内部受控。

(6)：Output signal format.
输出信号形式。

(8)：Terminal :Controlled by SOUNDWELL.
端子：本公司内部受控。

(9)：Flow Code：（Resolution、Number of detent、shaft、Request of exceptive) controlled by SOUNDWELL.
电脑流水号：（分解能力、定位数、轴心、特殊要求）为我公司内部受控。

(10)&(11)：Pulses & Detents 脉冲数与定位数。
定位数与其代码对应关系：Number of Detents & corresponding Codes.

定位数	0	6	12	15	16	18	20	24	30	32
代码	0	14	2	3	9	8	4	5	6	10

(12)：Shaft Style 轴形状

(13)：Shaft Length 轴长度

(14)：Shaft Material Code 轴材质代码

(15)：Working Length of Shaft
轴工作部位长度

EC04/EC05/EC06 Series
INCREMENTAL ENCODER

MODEL 品名	DIMENSIONS 尺寸	UNIT:mm

EC040102X2A-VH1

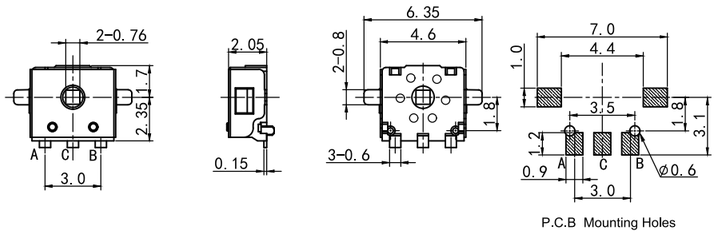

EC050102X1A-VA1

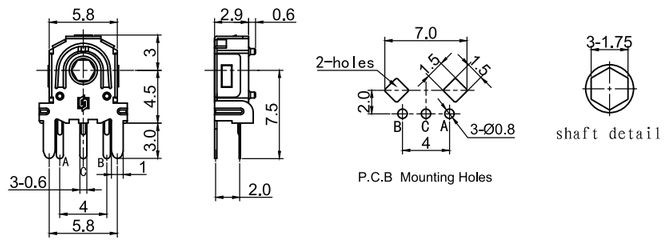

EC050103X1A-VH1

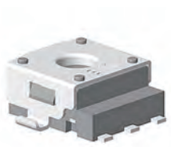

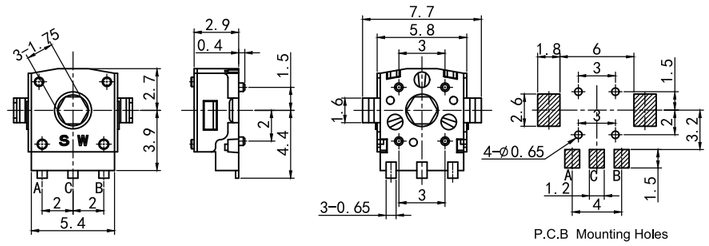

EC050104X1E-VH1

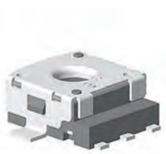

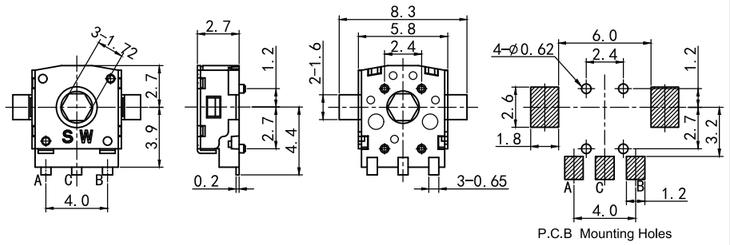

EC060101X0A-VH1

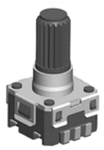

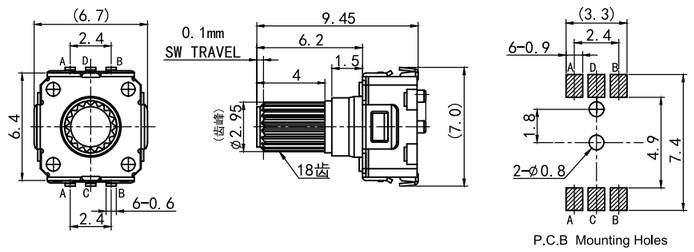

EC10 Series
INCREMENTAL ENCODER

MODEL 品名	DIMENSIONS 尺寸	UNIT:mm

EC101102X2H-HA☒

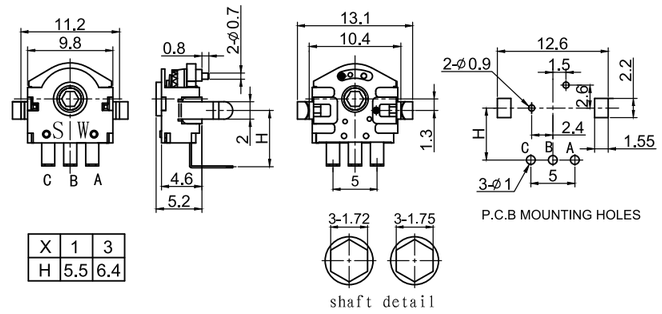

X	1	3
H	5.5	6.4

EC101102X2Z-VA☒

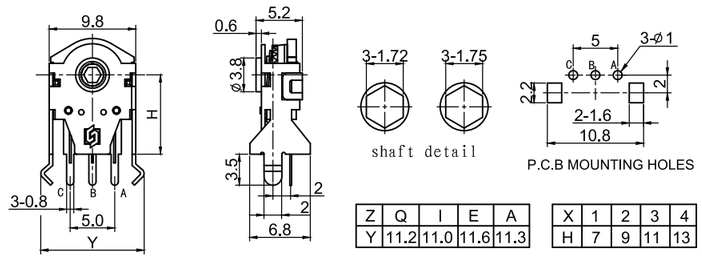

Z	Q	I	E	A
Y	11.2	11.0	11.6	11.3

X	1	2	3	4
H	7	9	11	13

EC102102X2W-VH1

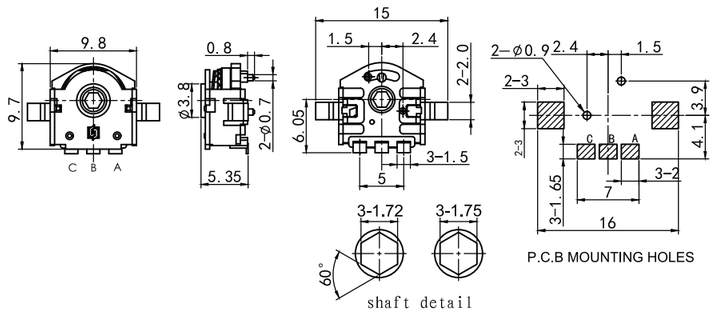

ENCODERS EC04/05/06/10

Items 项目	EC04	EC05	EC06	EC10
Pluse Specification 脉冲规格	6P	12P	6P	6P, 12P
Number of Detents 定位数（个）	6, 12	12	12	12, 24
Rotational Torque 旋转力矩(gf.cm)	10～50	10～80	10～50	5～100
Rating Power 额定功率	DC 5V 10mA			
Insulation Resistance 绝缘阻抗	50MΩ 1 Minute at DC 50V MAX			
Dielectric Voltage 耐电压	1 Minute at AC 50V			
Rotational Life 旋转寿命(Cycles)	80,000	100,000	20,000	100,000

EC09 Series
INCREMENTAL ENCODER

MODEL 品名	DIMENSIONS 尺寸	UNIT:mm

EC090101A2X-VA1

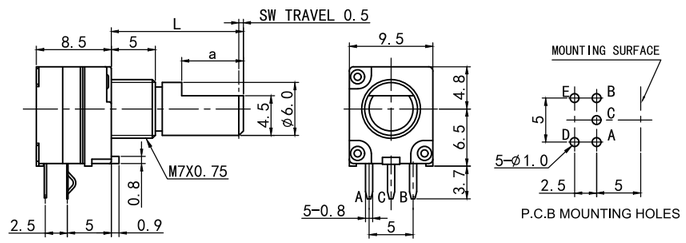

EC090102A1X-VA1

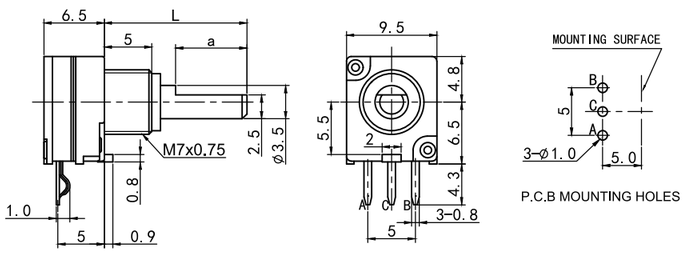

EC090101A2A-HA1

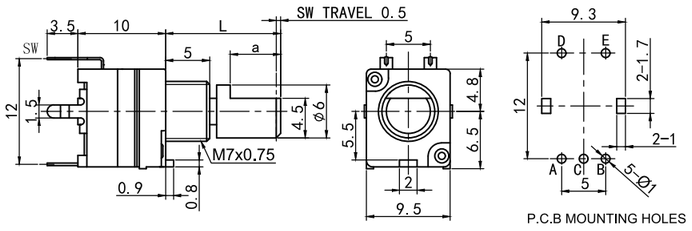

EC0902Ⓢ Ⓧ2Ⓩ-HA1

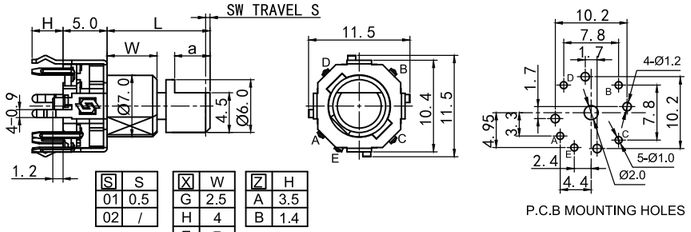

Ⓢ	S
01	0.5
02	/

Ⓧ	W
G	2.5
H	4
E	7

Ⓩ	H
A	3.5
B	1.4

Items 项目		EC0901	EC0902
Pluse Specification	脉冲规格	10P	12P
Number of Detents	定位数（个）	20	0,24
Rotational Torque	旋转力矩	40～300gf.cm	50～200gf.cm
Switch Operating	开关操作力	300~1200 gf	600±200 gf
Rotational Life	旋转寿命	30,000次 Min	20,000次 Min
Switch Life	开关按压寿命	30,000次 Min	10,000次 Min

EC04/EC05/EC06/09/10 Series
INCREMENTAL ENCODER

Resolution and Output signal

SERIES 系列	RESOLUTION 分解能力	DETENT 定位	ROTATION DIRECTION 旋转方向	SIGNAL 信号	OUTPUT PHASE 输出波形
EC04	6P	6	C.W (顺时针方向)	A(Terminal A-C) B(Terminal B-C)	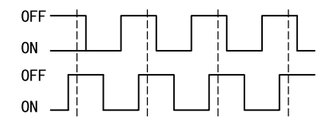
EC05	12P	12	C.W (顺时针方向)	A(Terminal A-C) B(Terminal B-C)	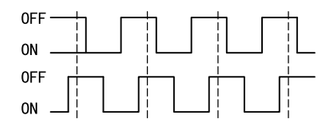
EC04 EC06	6P	12	C.W (顺时针方向)	A(Terminal A-C) B(Terminal B-C)	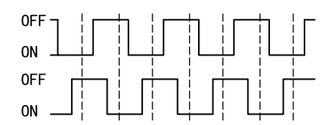
EC09	10P	20	C.W (顺时针方向)	A(Terminal A-C) B(Terminal B-C)	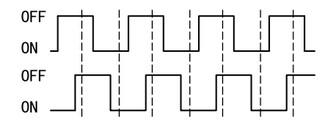
	12P	24			
EC10	6P	12	C.W (顺时针方向)	A(Terminal A-C) B(Terminal B-C)	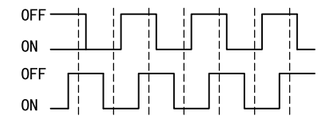
	12P	12	C.W (顺时针方向)	A(Terminal A-C) B(Terminal B-C)	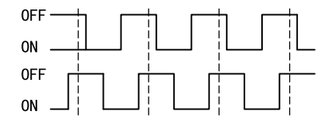
	12P	24	C.W (顺时针方向)	A(Terminal A-C) B(Terminal B-C)	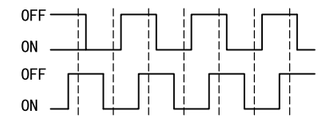

Note:The broken line shows detent position.
注明:虚线表示带卡点装置的卡点处位置。

EC1101 Series
INCREMENTAL ENCODER

MODEL 品名	DIMENSIONS 尺寸	UNIT:mm

EC110104☒2A-VA1

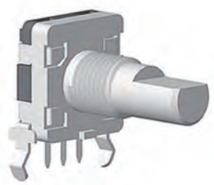

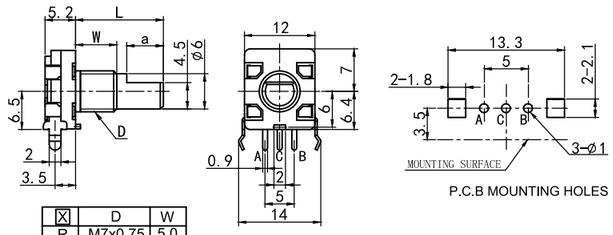

☒	D	W
R	M7x0.75	5.0
T	M7x0.75	7.0
M	Ø7	5.0
N	Ø7	7.0

EC110104☒2Z-HA1

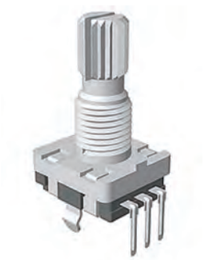

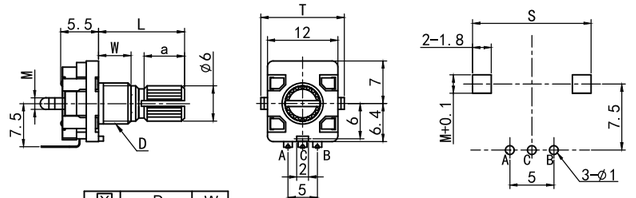

☒	D	W
R	M7x0.75	5.0
T	M7x0.75	7.0
M	Ø7	5.0
N	Ø7	7.0

Z	M	T	S
D	2.0	14.1	13.4
B	2.5	11.7	11.0

EC110101☒2A-VA1

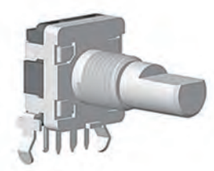

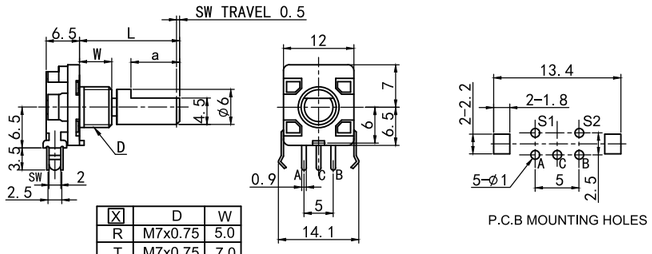

☒	D	W
R	M7x0.75	5.0
T	M7x0.75	7.0
M	Ø7	5.0
N	Ø7	7.0

EC110101☒2Z-HA1

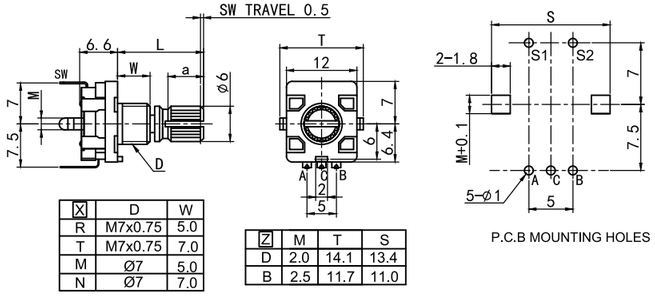

☒	D	W
R	M7x0.75	5.0
T	M7x0.75	7.0
M	Ø7	5.0
N	Ø7	7.0

Z	M	T	S
D	2.0	14.1	13.4
B	2.5	11.7	11.0

EC1101 Series
INCREMENTAL ENCODER

MODEL 品名	DIMENSIONS 尺寸	UNIT:mm

EC110101L2Z-HA1

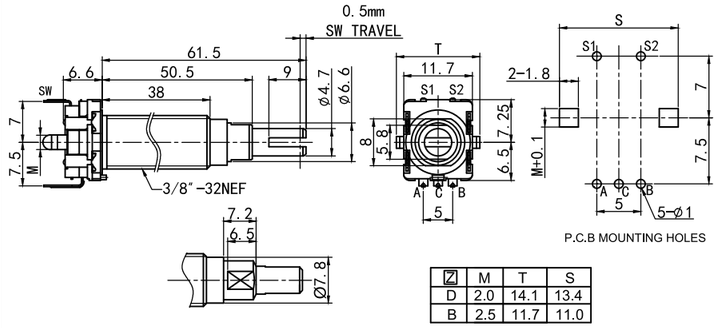

Z	M	T	S
D	2.0	14.1	13.4
B	2.5	11.7	11.0

EC110103☒2Z-HA1

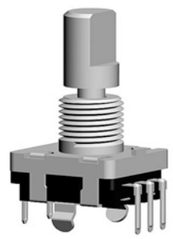

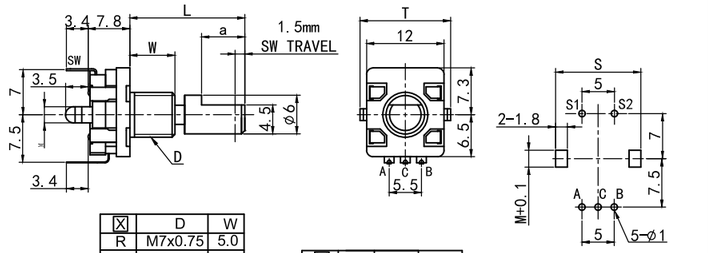

☒	D	W
R	M7x0.75	5.0
T	M7x0.75	7.0
M	Ø7	5.0
N	Ø7	7.0

Z	M	T	S
D	2.0	14.1	13.4
B	2.5	11.7	11.0

EC1101 Shaft Style and Dimensions

KA-TYPE

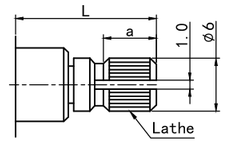

FA-TYPE

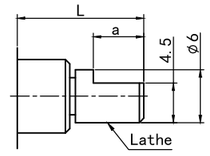

KV-TYPE

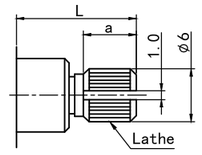

ENCODERS EC1101

Pluse Specification 脉冲规格	15P6; 20P4
Rotational Torque 旋转力矩	20～200gf.cm
Operating Temperature 工作温度	-20℃～85℃
Rating Power 额定功率	DC 5V 10mA
Insulation Resistance 绝缘阻抗	100MΩ 1 Minute at DC 300V
Dielectric Voltage 耐电压	1 Minute at AC 300V
Rotational Life 旋转寿命	30,000次 Min
Switch Force 开关按压力	300～550gf(0.5mm); 200～450gf(1.5mm)
Switch Rating Power 开关额定功率	DC 16V 10mA
Switch Life 开关按压寿命	20,000次 Min

EC1102/03 Series
INCREMENTAL ENCODER

MODEL 品名	DIMENSIONS 尺寸	UNIT:mm

EC110202☒2☐-HA1

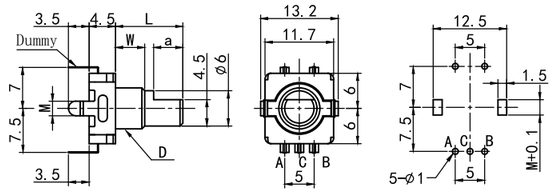

Z	M
D	2.0
B	2.5

☒	D	W
M	Ø7	5.0
N		7.0
B		9.0
A		10.0
Q		17.0
C	Ø9	10.0
G	M7*0.75	7.5
K		5
R		7

EC110201☒2☐-HA1

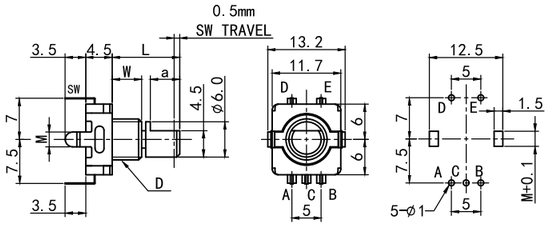

Z	M
D	2.0
B	2.5

☒	D	W
M	Ø7	5.0
N		7.0
B		9.0
A		10.0
Q		17.0
C	Ø9	10.0
G	M7*0.75	7.5
K		5
R		7

EC110201L2☐-HA1

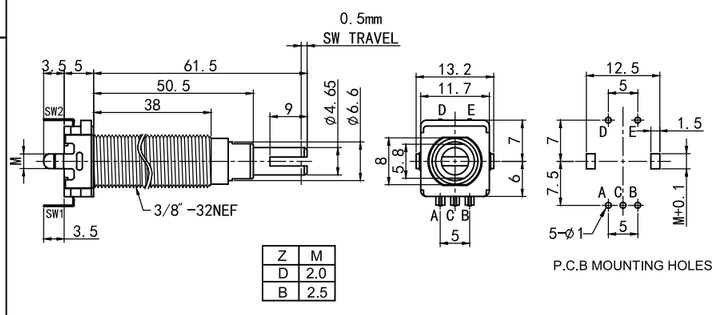

Z	M
D	2.0
B	2.5

EC110301A2☐-HA1

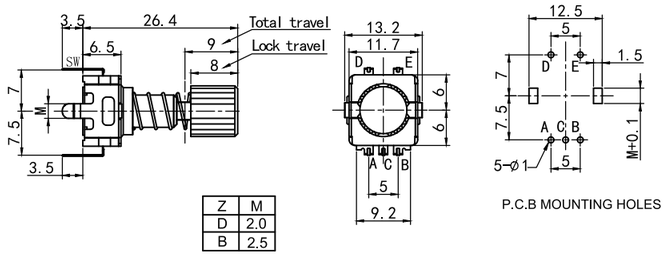

Z	M
D	2.0
B	2.5

EC1103/04 Series
INCREMENTAL ENCODER

MODEL 品名	DIMENSIONS 尺寸	UNIT:mm

EC110302A2☐-HA1

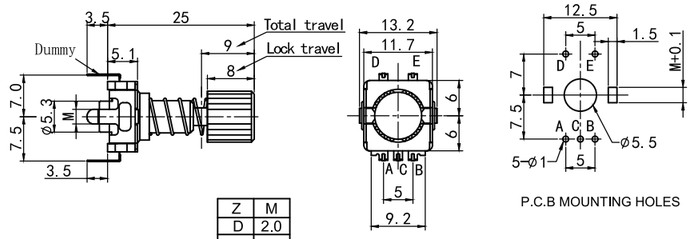

Z	M
D	2.0
B	2.5

EC11040☒☒2F-VH1

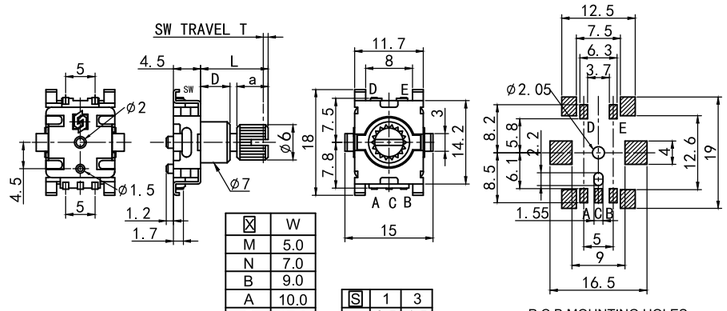

☒	W
M	5.0
N	7.0
B	9.0
A	10.0
Q	17.0

S	1	3
T	0.5	1.5

EC110402M2H-VH1

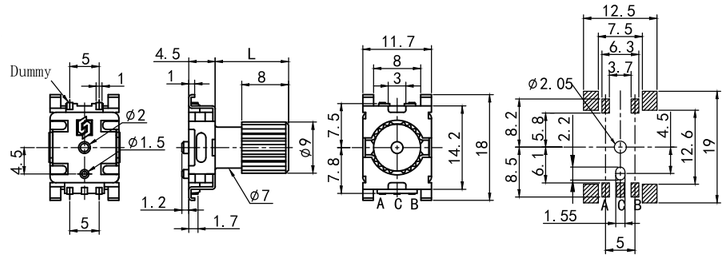

EC110401D2H-VH1

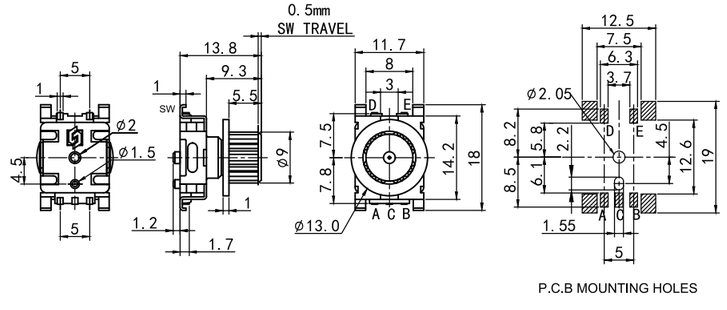

EC1105/06 Series
INCREMENTAL ENCODER

MODEL 品名	DIMENSIONS 尺寸	UNIT:mm

EC110501☒2☐-HA1

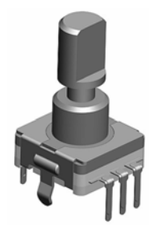

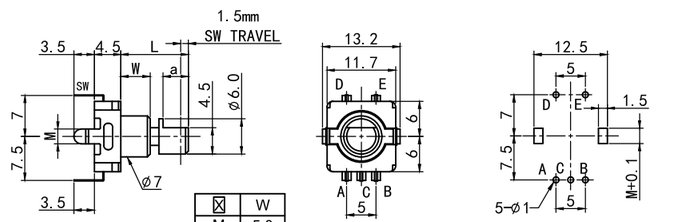

☒	W
M	5.0
N	7.0
B	9.0
A	10.0
Q	17.0

Z	M
D	2.0
B	2.5

EC110501B2☐-HA1

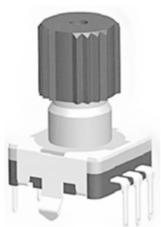

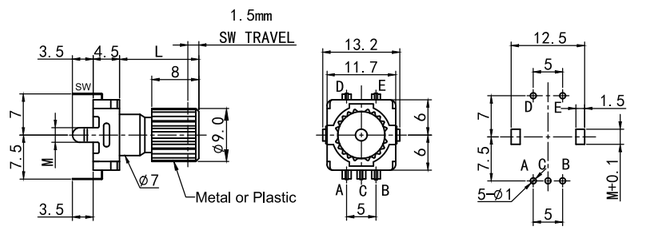

☐	M
D	2.0
B	2.5

EC110502N2A-HA1

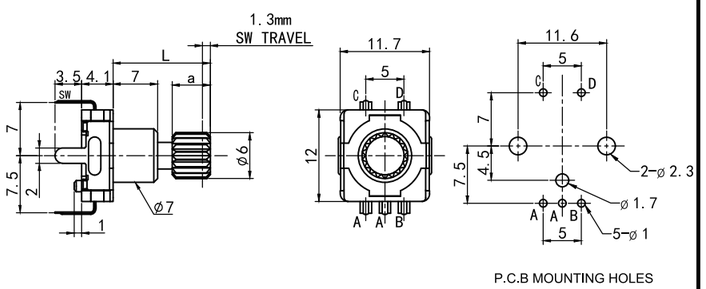

EC110602A2B-HA1

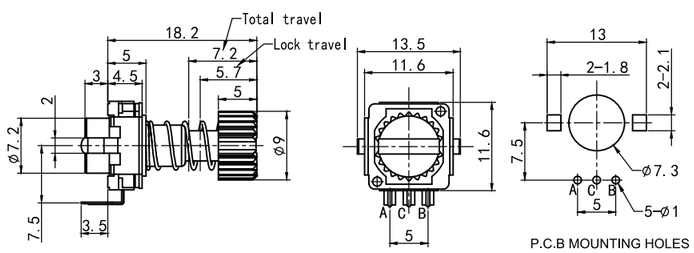

EC1107/08 Series
INCREMENTAL ENCODER

MODEL 品名	DIMENSIONS 尺寸	UNIT:mm

EC110701N2B-HA1

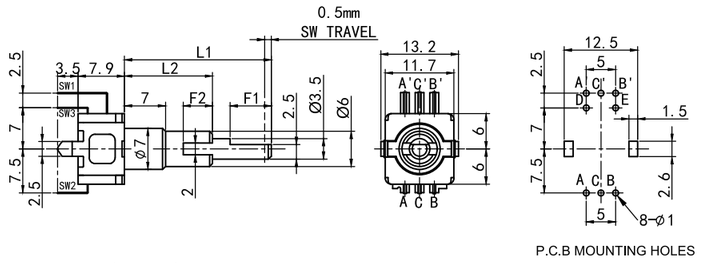

EC110801N6☒-HA1

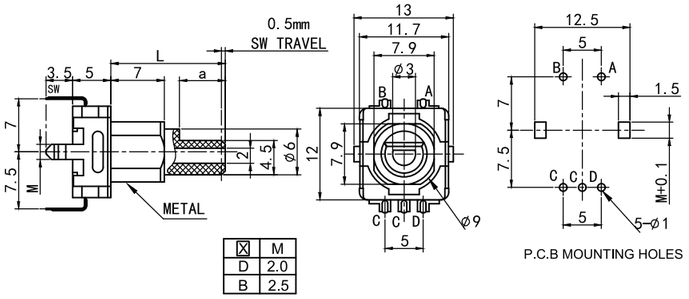

☒	M
D	2.0
B	2.5

EC110803A2☒-HA1

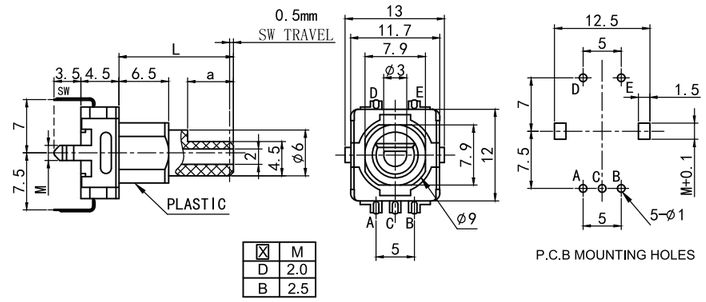

☒	M
D	2.0
B	2.5

Pin Function 端子脚功能

*a	*b	*c	*d
EC1102/EC1104/EC110501	EC110502	EC110801	EC110803
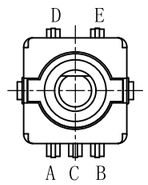	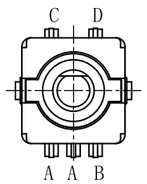	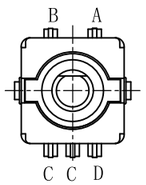	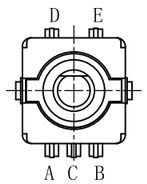
A、B、C：Encoder D、E： Switch	A、B、C：Encoder C、D： Switch	A、B、C：Encoder C、D： Switch	A、B、C：Encoder D、E： Switch

EC1109/10 Series
INCREMENTAL ENCODER

MODEL 品名	DIMENSIONS 尺寸	UNIT:mm

EC110901L2B-HA1

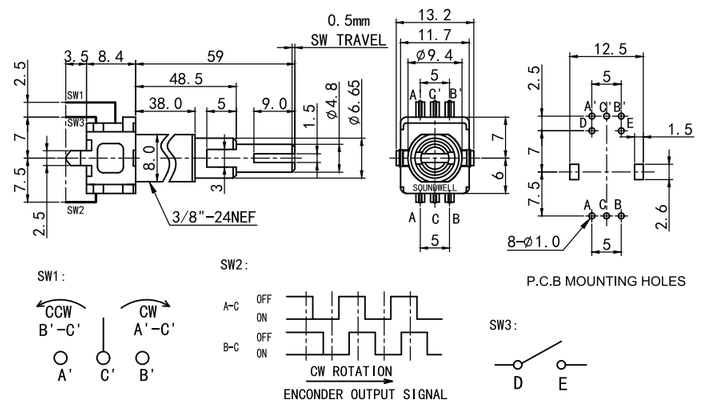

EC1110 S X 2 Y -HA1

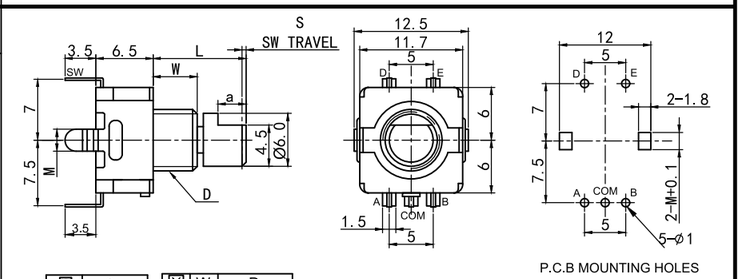

S	S
02	无开关
01	0.5
05	1.5

X	W	D
U	7	M7X0.75
S	5	M7X0.75
E	5	M6X0.35

Y	M
D	2.0
B	2.5

ENCODERS EC1102~EC1110

Pluse Specification 脉冲规格	8P	9P	12P	15P	16P	20P	24P
Number of Detents 定位数	16	18	24	30	32	20	24
Rotational Torque 旋转力矩	20～200gf.cm						
Operating Temperature 工作温度	-40℃～85℃						
Rating Power 额定功率	DC 5V 10mA						
Insulation Resistance 绝缘阻抗	100MΩ 1 Minute at DC 300V						
Dielectric Voltage 耐电压	1 Minute at AC 300V						
Rotational Life 旋转寿命	30,000次；50,000次；100,000次						
Switch Force 开关按压力	300～550gf(0.5mm)；200～450gf(1.5mm)						
Switch Travel 开关行程	0.5mm；1.3mm；1.5mm						
Switch Rating Power 开关额定功率	DC 16V 10mA						
Switch Life 开关按压寿命	20,000次；50,000次；100,000次						

EC1102~EC1110 Series
INCREMENTAL ENCODER

EC1102~EC1110 SERIES SHAFT STYLE

KA-TYPE

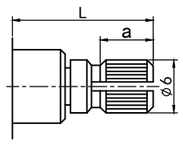

FA-TYPE

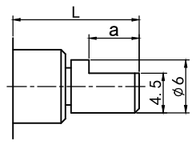

KV-TYPE

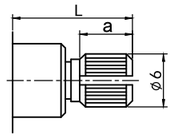

RE-TYPE (EC1107/EC1109)

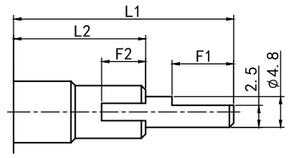

FL-TYPE

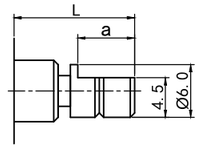

FF-TYPE

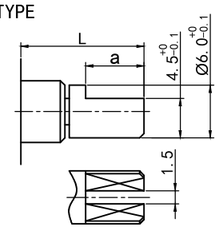

RK-TYPE

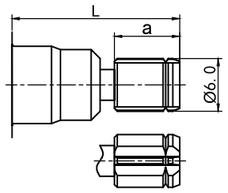

RC-TYPE

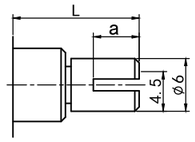

RG-TYPE

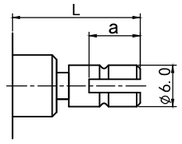

KC-TYPE(EC1104)

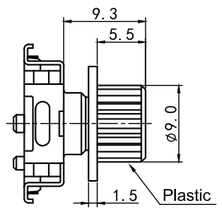

KC-TYPE(EC110501)

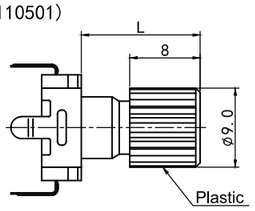

EC1108 FA-TYPE

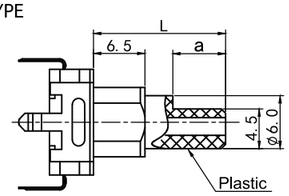

L	a
13	5
15	6
20	7.5

EC11 Series
INCREMENTAL ENCODER

Resolution and Output signal

SERIES 系列	RESOLUTION 分解能力	DETENT 定位	ROTATION DIRECTION 旋转方向	SIGNAL 信号	OUTPUT PHASE 输出波形
EC11	8P	16	C.W (顺时针方向)	A(Terminal A-C) B(Terminal B-C)	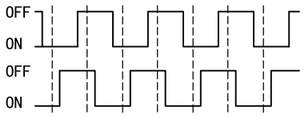
	9P	18	C.W (顺时针方向)	A(Terminal A-C) B(Terminal B-C)	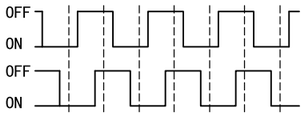
	12P	24	C.W (顺时针方向)	A(Terminal A-C) B(Terminal B-C)	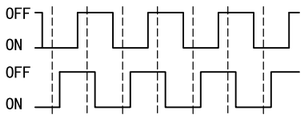
	15P(正向)	30	C.W (顺时针方向)	A(Terminal A-C) B(Terminal B-C)	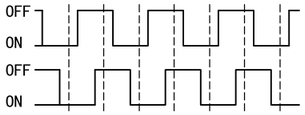
	15P(反向)	30	C.W (顺时针方向)	A(Terminal A-C) B(Terminal B-C)	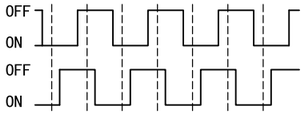
	16P	32	C.W (顺时针方向)	A(Terminal A-C) B(Terminal B-C)	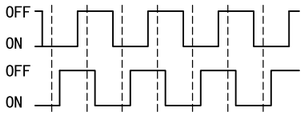
	20P(正向)	20	C.W (顺时针方向)	A(Terminal A-C) B(Terminal B-C)	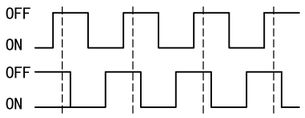
	20P(正向)	20	C.W (顺时针方向)	A(Terminal A-C) B(Terminal B-C)	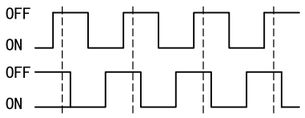
	24P	24	C.W (顺时针方向)	A(Terminal A-C) B(Terminal B-C)	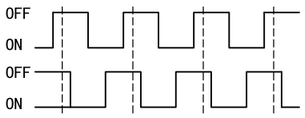

Note:The broken line shows detent position.
注明:虚线表示带卡点装置的卡点处位置。

EC12 Series
INCREMENTAL ENCODER

MODEL 品名 | DIMENSIONS 尺寸 | UNIT:mm

EC121301X5B-HA1

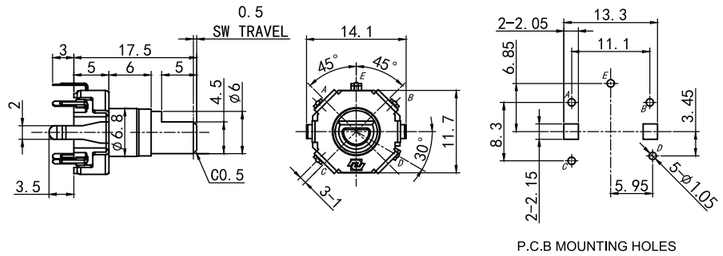

EC1211 S X2A-VA1

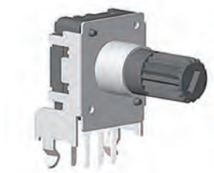

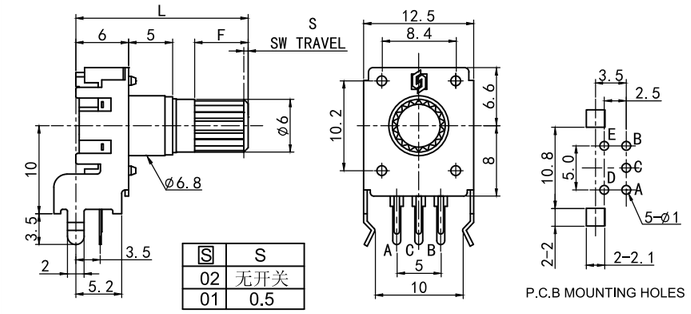

S	S
02	无开关
01	0.5

EC121102X2B-HA1

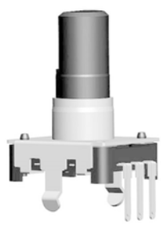

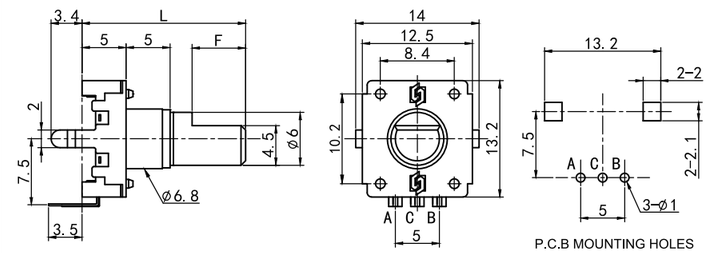

EC121101X2B-HA1

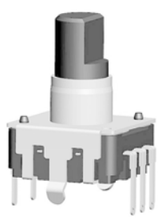

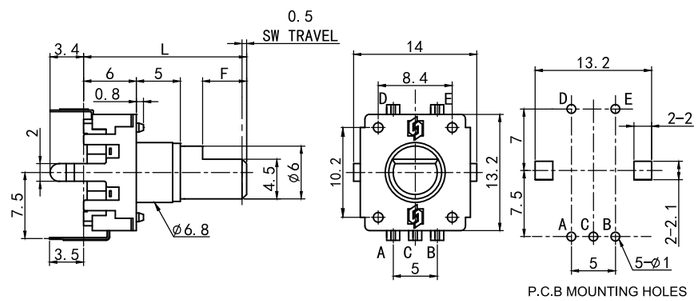

EC12 Series
INCREMENTAL ENCODER

MODEL 品名	DIMENSIONS 尺寸	UNIT:mm

EC121102☒2B-HA1

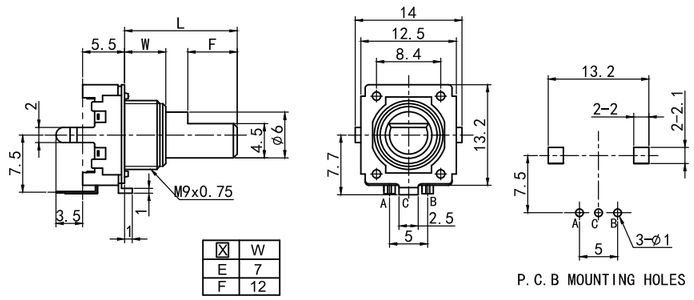

☒	W
E	7
F	12

EC121101X2F-VA1

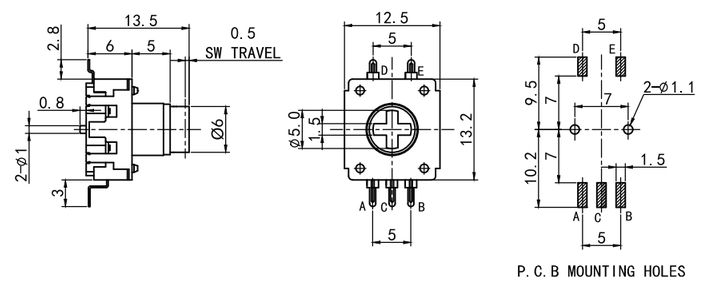

EC121102X2D-HA1

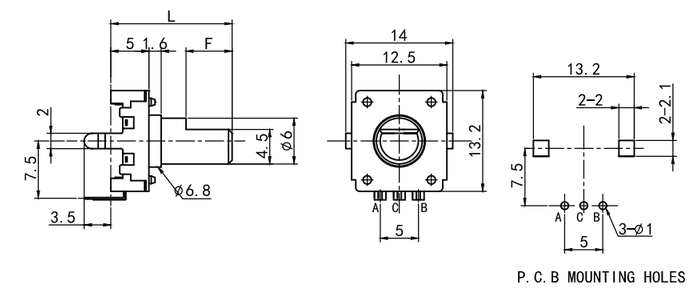

EC121701J2A-HA1

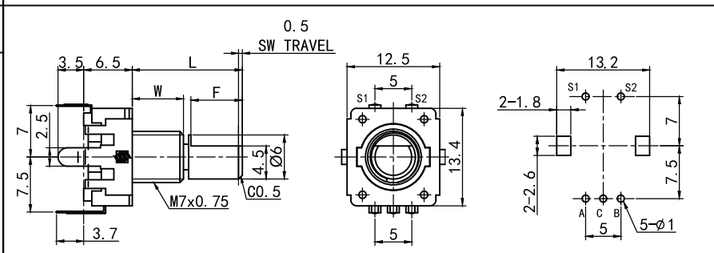

W
5
7

EC12 Series
INCREMENTAL ENCODER

EC1211 SERIES SHAFT STYLE

FA TYPE

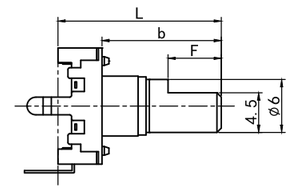

L	17.5	17.5	20	22.5	22.5	25	30
b	12.5	12.5	15	17.5	17.5	20	25
F	5	7	7	7	10	12	12

KO TYPE

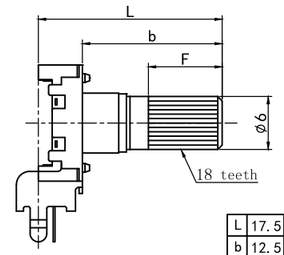

L	17.5	20	25	30
b	12.5	15	20	25
F	5	7	12	12

FC TYPE

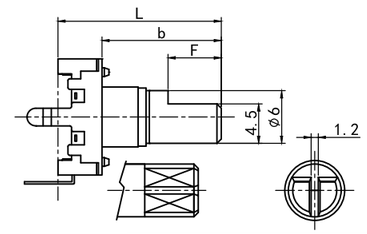

L	10.2	11	12.5	15	20	25	30
b	5.2	6	7.5	10	15	20	25
F	3	4	5	7.5	7	12	12

FA TYPE

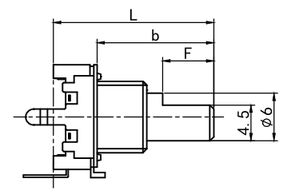

L	20	24.5	25	29.5	30
b	14.5	19	19.5	24	24.5
F	7	12	12	12	12

FA TYPE WITH SW

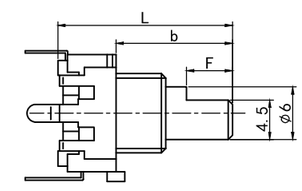

L	19.0	23.0	25.5	26.0	30.5
b	12.5	16.5	19.0	19.5	24.0
F	7	7	12	9.7	12

FA TYPE WITH SW

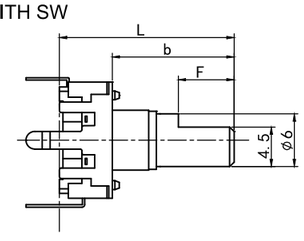

L	17.5	20.0	22.5	25.0	28.0	30.0
b	11.5	14.0	16.5	19.0	22.0	24.0
F	5	7	7	12	12	12

KF TYPE WITH SW

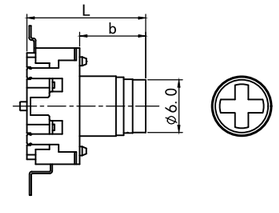

L	13.5
b	7.5

EC1213 SERIES SHAFT STYLE

FA TYPE WITH SW

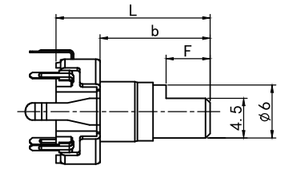

L	17.5
b	12.5
F	5

EC16 Series
INCREMENTAL ENCODER

MODEL 品名	DIMENSIONS 尺寸	UNIT:mm

EC162102Z2A -VA1

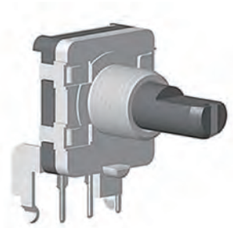

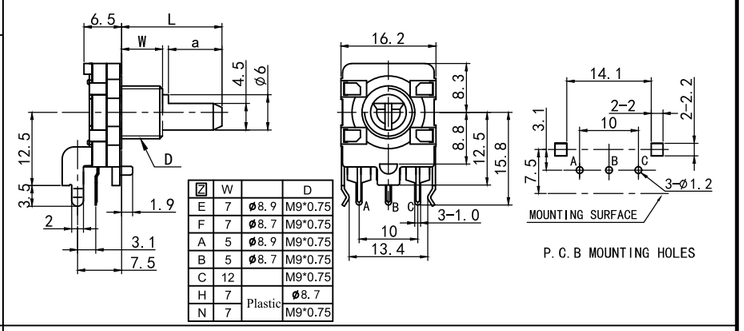

Z	W		D
E	7	ø8.9	M9*0.75
F	7	ø8.7	M9*0.75
A	5	ø8.9	M9*0.75
B	5	ø8.7	M9*0.75
C	12		M9*0.75
H	7	Plastic	ø8.7
N	7		M9*0.75

EC162102Z2B -HA1

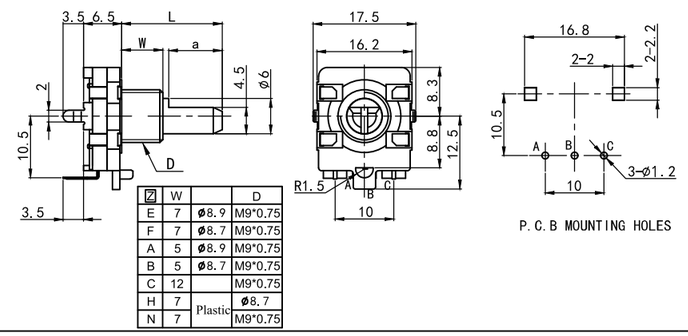

Z	W		D
E	7	ø8.9	M9*0.75
F	7	ø8.7	M9*0.75
A	5	ø8.9	M9*0.75
B	5	ø8.7	M9*0.75
C	12		M9*0.75
H	7	Plastic	ø8.7
N	7		M9*0.75

EC162101Z2B -HA1

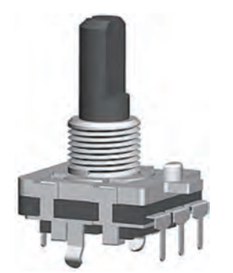

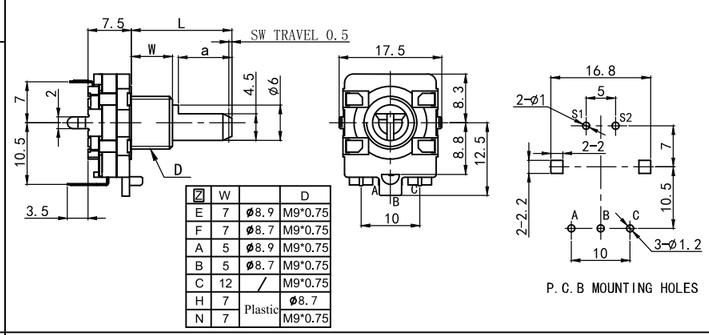

Z	W		D
E	7	ø8.9	M9*0.75
F	7	ø8.7	M9*0.75
A	5	ø8.9	M9*0.75
B	5	ø8.7	M9*0.75
C	12	/	M9*0.75
H	7	Plastic	ø8.7
N	7		M9*0.75

EC160201A2X-HA1

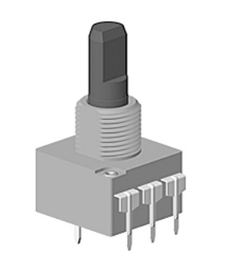

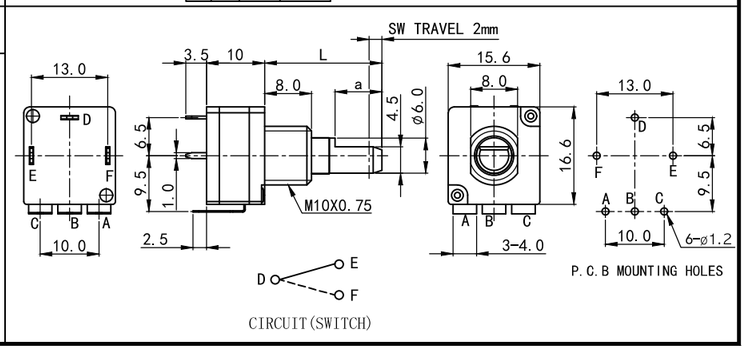

EC16 Series
INCREMENTAL ENCODER

MODEL 品名	DIMENSIONS 尺寸	UNIT:mm

EC160402A2A-HA1

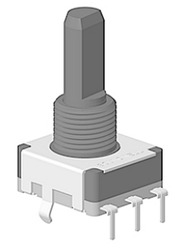

钢珠结构（Ball style）

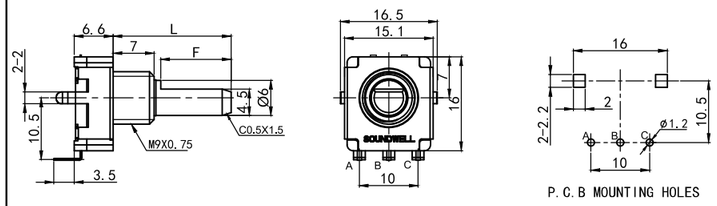

EC160502A2A-PA1

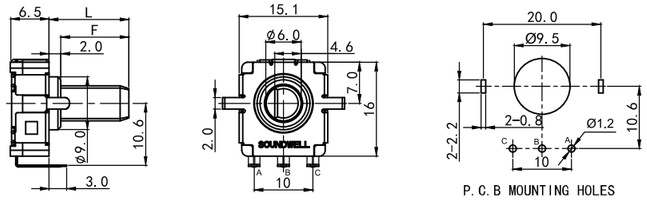

ENCODERS EC12/16

Items 项目	EC12	EC16	EC1602
Pluse Specification 脉冲规格	12P;18P,24P	12P;24P	12P;24P
Detents Number 定位数(个)	0,12,18,24	0,12,24	0,12,24
Rotational Torque 旋转力矩	10～200gf.cm		30～200gf.cm
Operating Temperature 工作温度	-40℃～85℃		-20°C～70°C
Rating Power 额定功率	DC 5V 10mA		
Insulation Resistance 绝缘阻抗	100MΩ 1 Minute at DC 250V		
Dielectric Voltage 耐电压	1 Minute at AC 250V		
Rotational Life 旋转寿命	30,000次 Min		
Switch Force 开关按压力	300～550gf		1200～1800gf
Switch Rating Power 开关额定功率	DC 16V 10mA		AC 250V 5A
Switch Life 开关按压寿命	20,000次 Min		15,000次 Min

EC16 Series
INCREMENTAL ENCODER

EC162102 SERIES SHAFT STYLE

FA TYPE

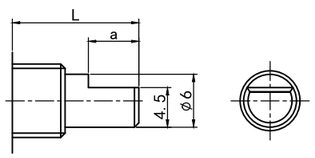

L	15	20	25	30
a	7	12	12	12

FB TYPE

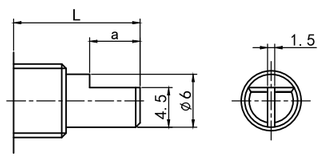

L	15	20	25	30
a	7	12	12	12

KQ TYPE

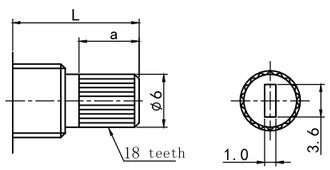

L	15	20	25	30
a	7	12	12	12

EC162101 SERIES SHAFT STYLE

FA TYPE

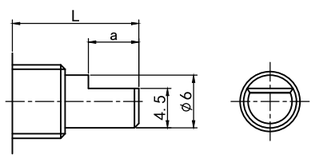

L	15	20	25	30
a	7	12	12	12

FB TYPE

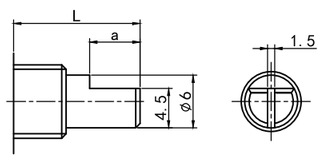

L	15	20	25	30
a	7	12	12	12

KQ TYPE

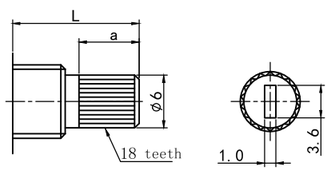

L	15	20	25	30
a	7	12	12	12

EC162104 SHAFT STYLE

KO-TYPE

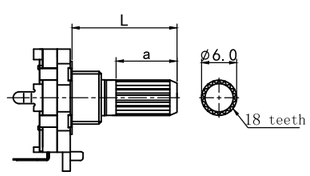

L	15.0	20.0
a	7.0	12.0

FB-TYPE

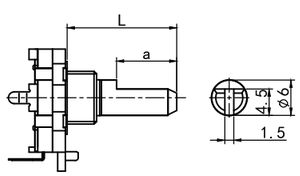

L	20.0	20.0
a	12.0	12.0

EC1605 SHAFT STYLE

FA-TYPE

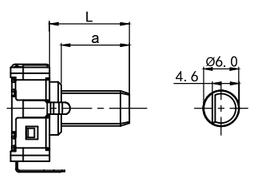

L	13.6
a	11.6

EC160201 SHAFT STYLE

FA-TYPE

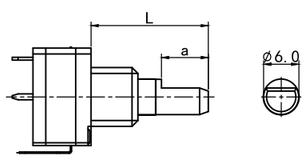

L	15.0	18.0	20.0	21.0
a	5.0	7.5	8.0	8.0

EC1604 SHAFT STYLE

FA-TYPE

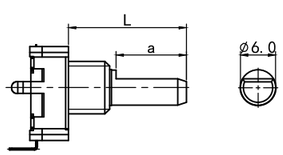

L	20.0	25.0	16.4
a	12.0	15.0	7.6

EC12/16 Series
INCREMENTAL ENCODER

Resolution and Output signal

SERIES 系列	RESOLUTION 分解能力	DETENT 定位	ROTATION DIRECTION 旋转方向	SIGNAL 信号	OUTPUT PHASE 输出波形
EC1213	15P	30	C.W (顺时针方向)	A(Terminal A-C)	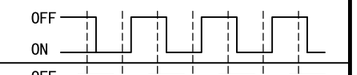
				B(Terminal B-C)	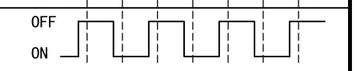
EC12	12P	12	C.W (顺时针方向)	A(Terminal A-C)	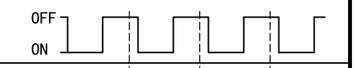
				B(Terminal B-C)	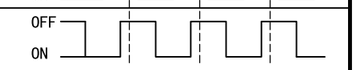
	12P	24	C.W (顺时针方向)	A(Terminal A-C)	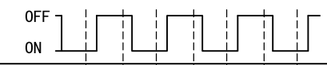
				B(Terminal B-C)	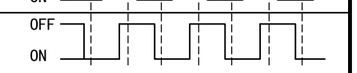
	18P	18	C.W (顺时针方向)	A(Terminal A-C)	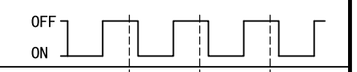
				B(Terminal B-C)	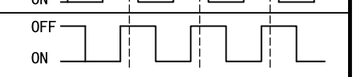
	24P	24	C.W (顺时针方向)	A(Terminal A-C)	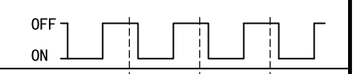
				B(Terminal B-C)	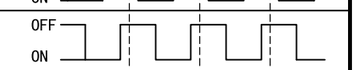
EC16	12P	12	C.W (顺时针方向)	A(Terminal A-C)	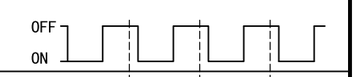
				B(Terminal B-C)	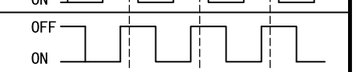
	12P	24	C.W (顺时针方向)	A(Terminal A-C)	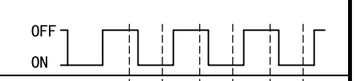
				B(Terminal B-C)	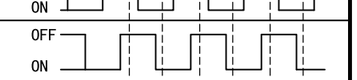
	24P	24	C.W (顺时针方向)	A(Terminal A-C)	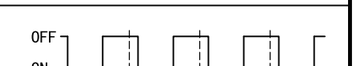
				B(Terminal B-C)	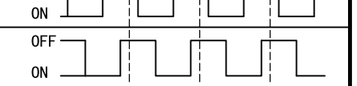

Note:The broken line shows detent position.
注明:虚线表示带卡点装置的卡点处位置。

EC18/21 Series
INCREMENTAL ENCODER

MODEL 品名	DIMENSIONS 尺寸	UNIT:mm

EC180102X2X-VH1

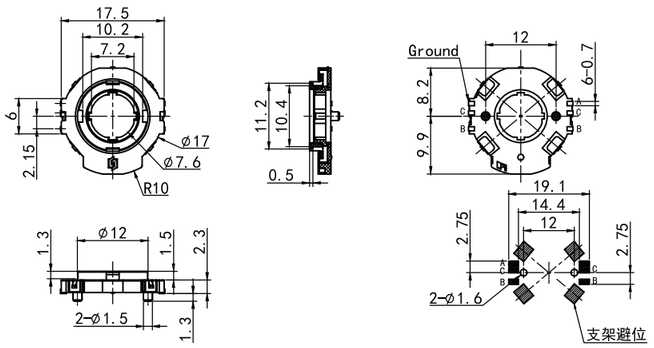

P.C.B MOUNTING DETAIL

EC2101Z X5A-HA1

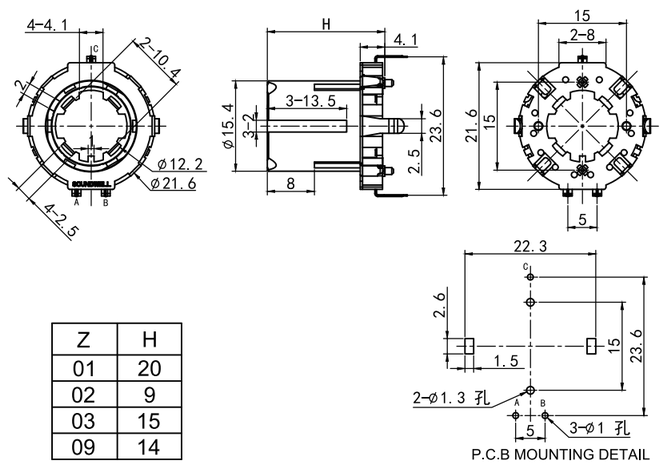

Z	H
01	20
02	9
03	15
09	14

P.C.B MOUNTING DETAIL

EC2101Z X5B-HA1

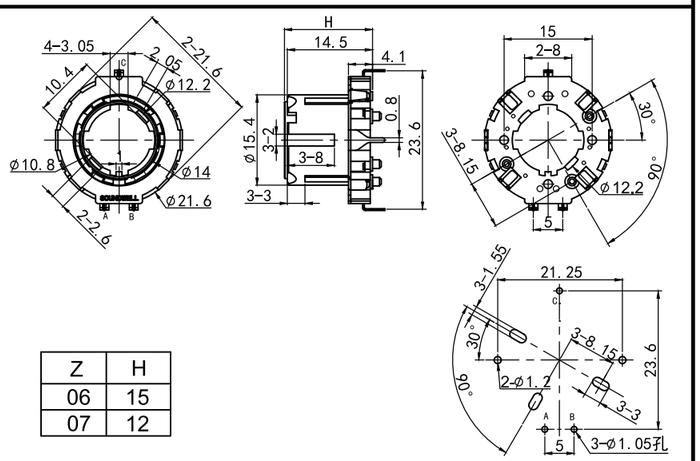

Z	H
06	15
07	12

P.C.B MOUNTING DETAIL

EC25/28 Series
INCREMENTAL ENCODER

MODEL 品名	DIMENSIONS 尺寸	UNIT:mm

EC250101X5A-HA1

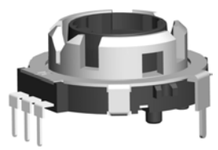

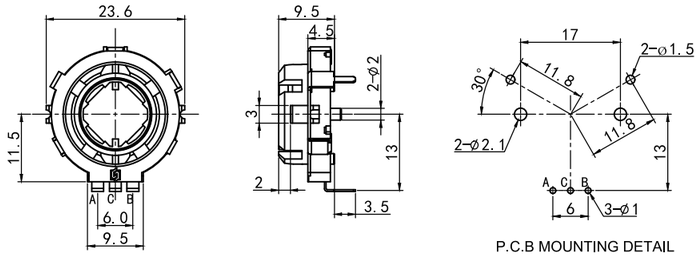

P.C.B MOUNTING DETAIL

EC253000X0A-HA1

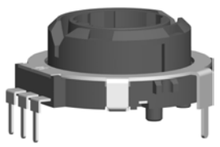

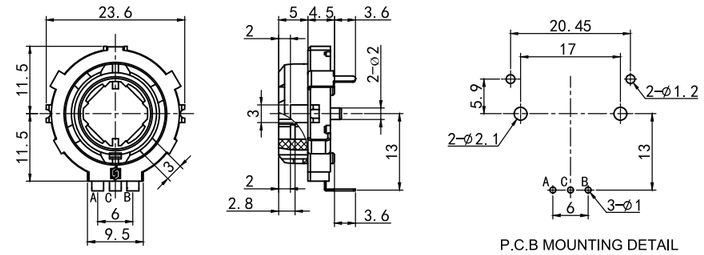

P.C.B MOUNTING DETAIL

EC2801Z X5A-HA1

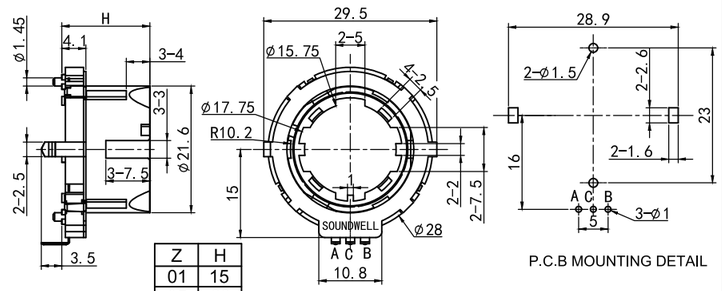

Z	H
01	15
05	23

P.C.B MOUNTING DETAIL

EC280103X5A-HA1

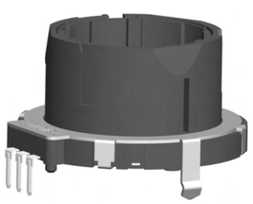

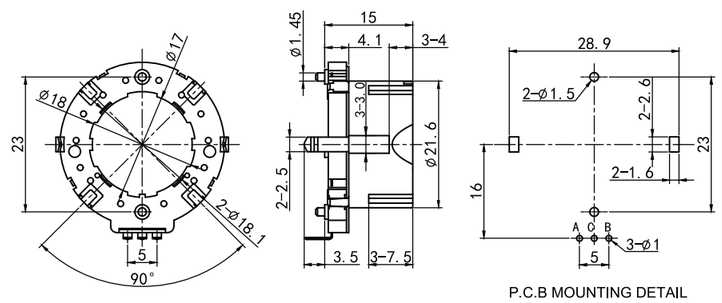

P.C.B MOUNTING DETAIL

EC28 Series
INCREMENTAL ENCODER

MODEL 品名	DIMENSIONS 尺寸	UNIT:mm

EC280104X5A-HA1

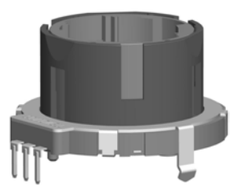

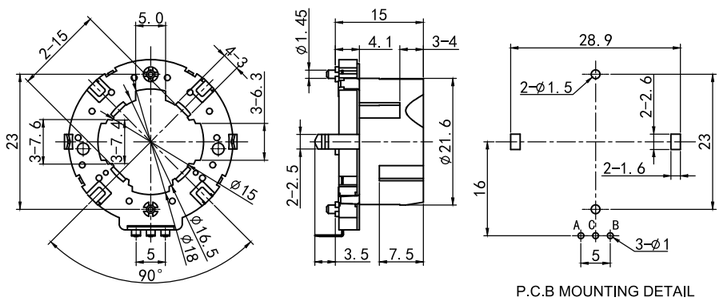

P.C.B MOUNTING DETAIL

EC280202X5A-HA1

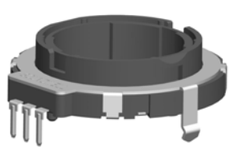

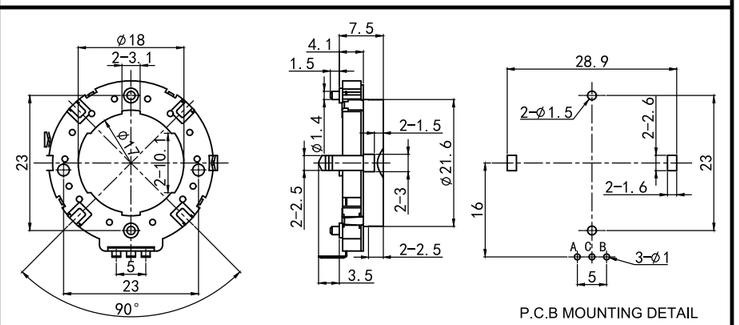

P.C.B MOUNTING DETAIL

EC280302X5A-HA1

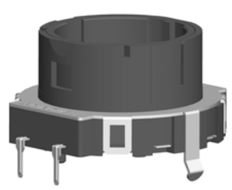

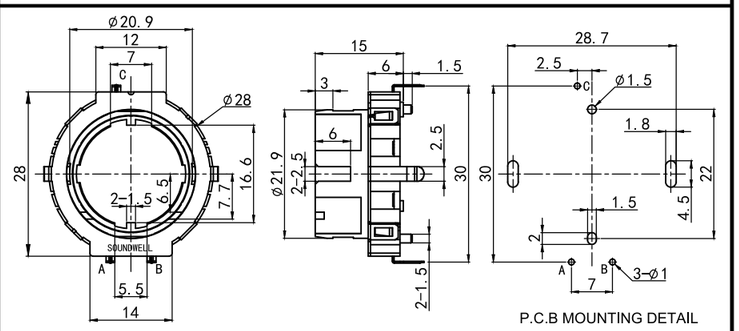

P.C.B MOUNTING DETAIL

EC280401X5A-HA1

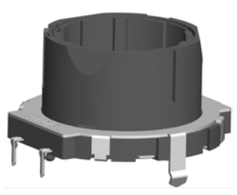

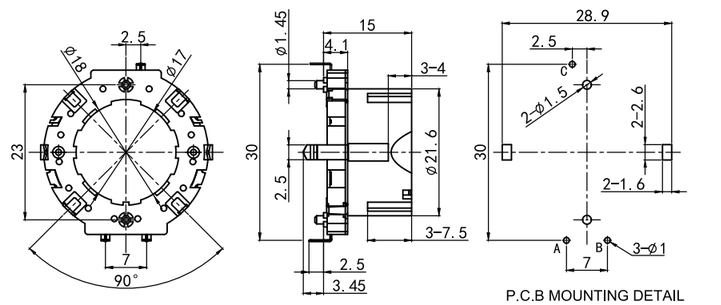

P.C.B MOUNTING DETAIL

EC33/35 Series
INCREMENTAL ENCODER

MODEL 品名	DIMENSIONS 尺寸	UNIT:mm

EC330102X5A-HA1

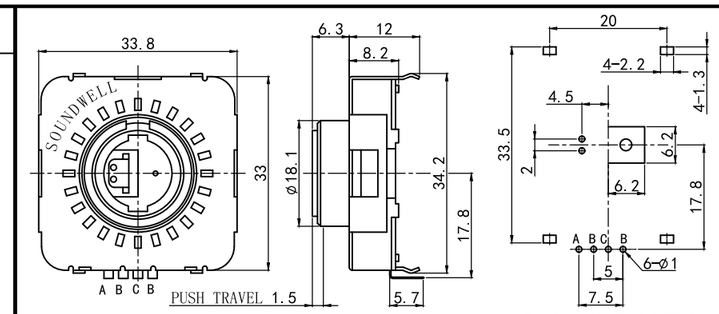

P.C.B MOUNTING DETAIL

EC35Z02X8A-HA1

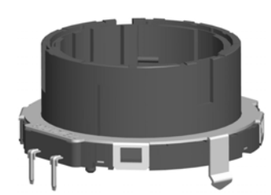

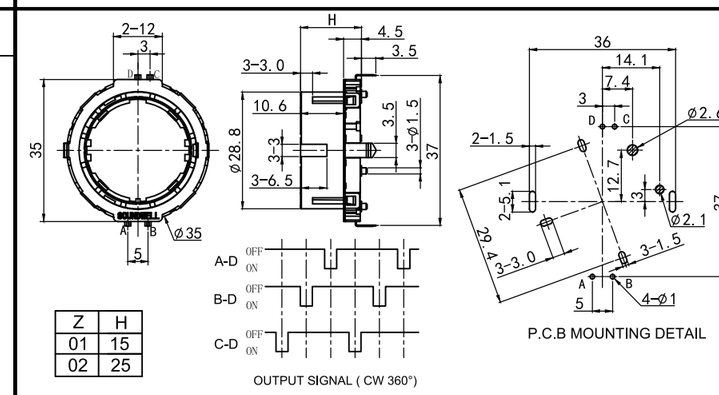

Z	H
01	15
02	25

OUTPUT SIGNAL (CW 360°)

P.C.B MOUNTING DETAIL

EC35030ZXYA-HA1

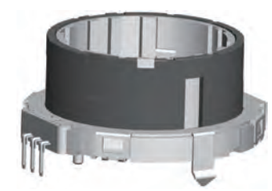

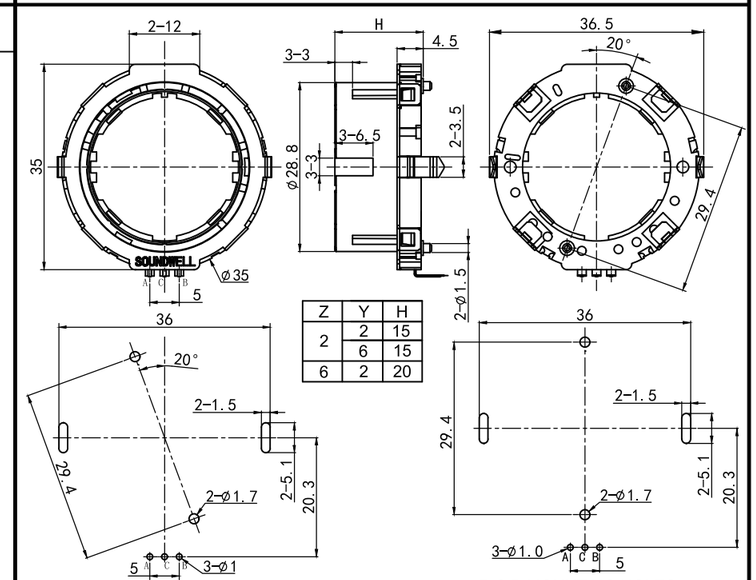

Z	Y	H
2	2	15
	6	15
6	2	20

P.C.B MOUNTING HOLES
EC350302X2A

P.C.B MOUNTING HOLES
EC350302X6A/EC350306X2A

EC35 Series
INCREMENTAL ENCODER

MODEL 品名	DIMENSIONS 尺寸	UNIT:mm

EC350401X5A-HA1

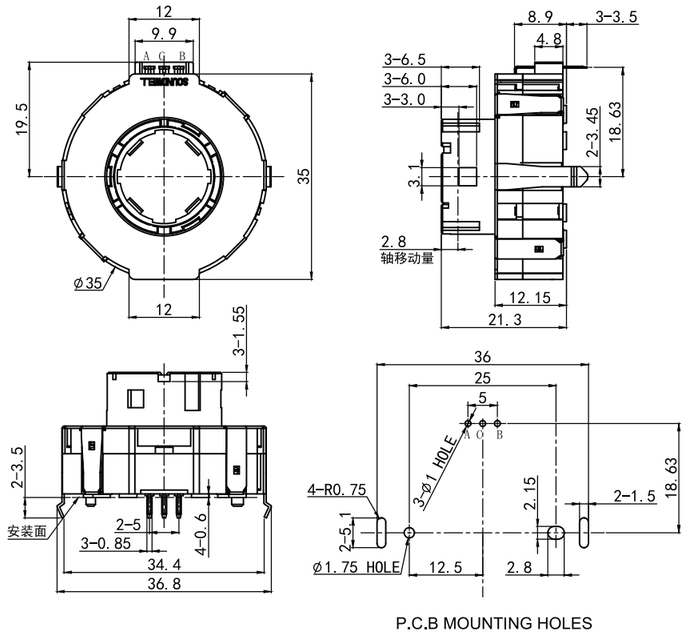

P.C.B MOUNTING HOLES

EC350501X5A-HA1

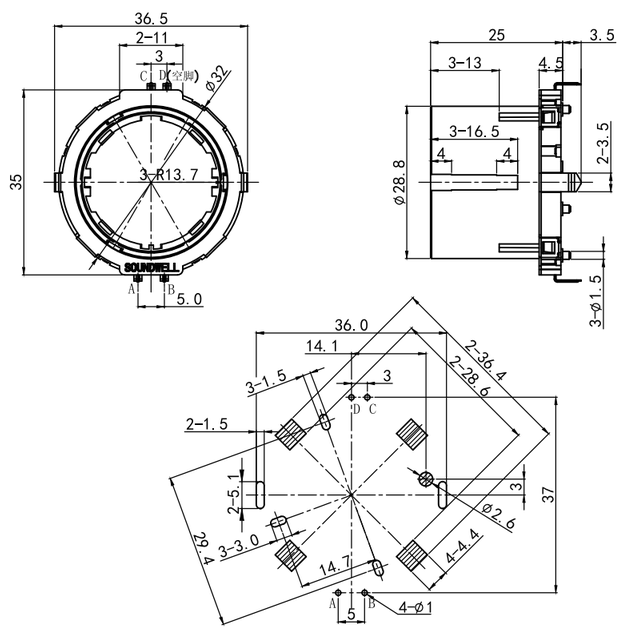

P.C.B MOUNTING HOLES

EC35 Series
INCREMENTAL ENCODER

MODEL 品名	DIMENSIONS 尺寸	UNIT:mm

EC350701X2A-HA1

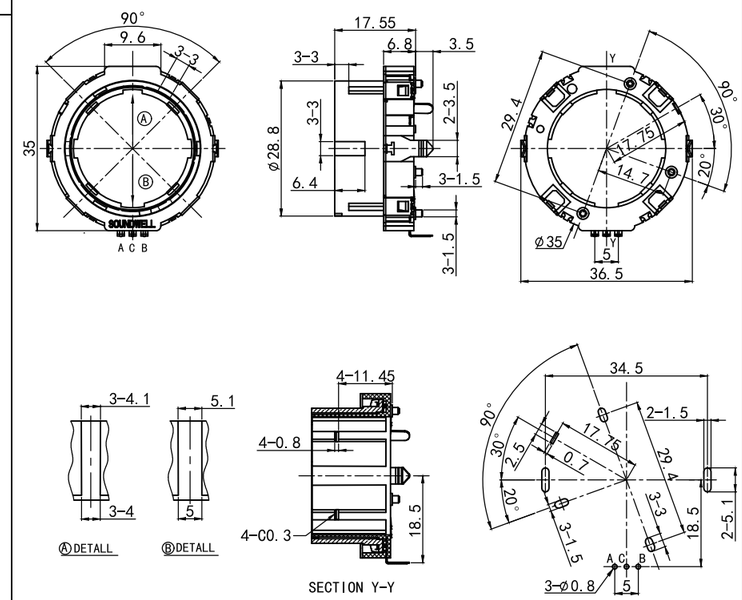

P.C.B MOUNTING HOLES

Items 项目		EC18	EC2501	EC253	EC28
Pluse Specification	脉冲规格	10P	10P	10P 20P	15P 18P 24P
Number of Detents	定位数(个)	30	20	20	30 18 24
Rotational Torque	旋转力矩	50～300gf.cm	50～300gf.cm		50～300gf.cm
Rating Voltage	额定电压	DC 5V 10mA			
Insulation Resistance	绝缘阻抗	100MΩ 1 Minute at DC 250V			
Dielectric Voltage	耐电压	1 Minute at AC 300V			
Rotational Life	旋转寿命	30,000次 Min	30,000次 Min		50,000次 Min

Items 项目		EC3501/02	EC3503	EC3504	EC3505	EC3507
Pluse Specification	脉冲规格	10P	15P	18P	15P 20P	16P
Number of Detents	定位数	30	30	18	20 30	16
Rotational Torque	旋转力矩	50～300gf.cm	50～400gf.cm			110～250gf.cm
Rating Voltage	额定电压	DC 5V 10mA				
Insulation Resistance	绝缘阻抗	100MΩ 1 Minute at DC 250V				
Dielectric Voltage	耐电压	1 Minute at AC 300V				
Rotational Life	旋转寿命	30,000次 Min	50,000次 Min			30,000次 Min

EC40 Series
INCREMENTAL ENCODER

MODEL 品名	DIMENSIONS 尺寸	UNIT:mm

EC400101X5A-HA1

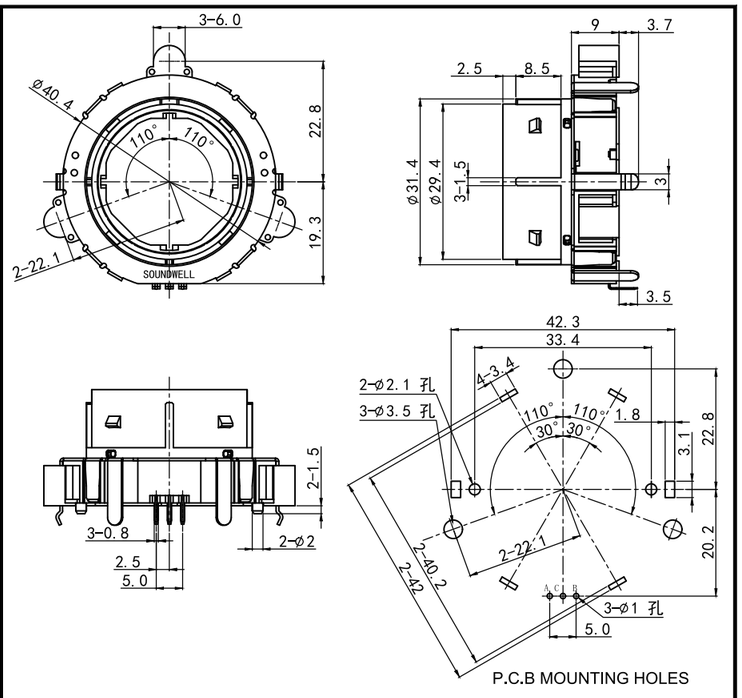

EC400201X2A-HA1

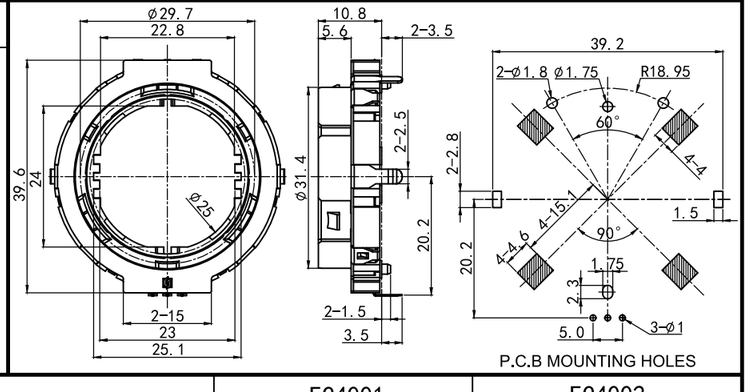

Items 项目		EC4001	EC4002
Number of Pulses	脉冲数	15P	14P
Number of detents	定位数	30	14
Rotational Torque	旋转力矩	50~300gf.cm	450±150gf.cm
Insulation resistance	绝缘阻抗	100MΩ 1 Minute at DC 250V	
Dielectric Voltage	耐电压	1 Minute at AC 300V	
Rotational Life	旋转寿命	50,000 cycles	30,000 cycles

EC43 Series
INCREMENTAL ENCODER

MODEL 品名	DIMENSIONS 尺寸	UNIT:mm

EC430102X2A-HA1

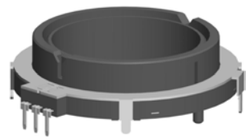

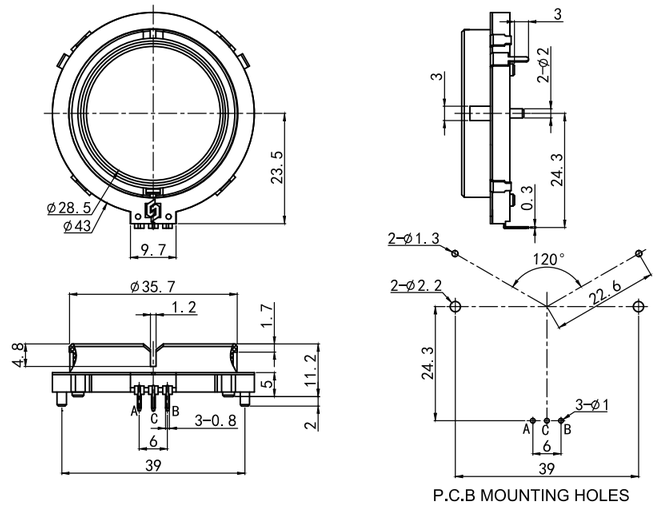

EC430202X2A-HA1

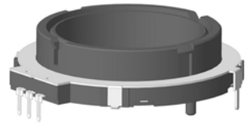

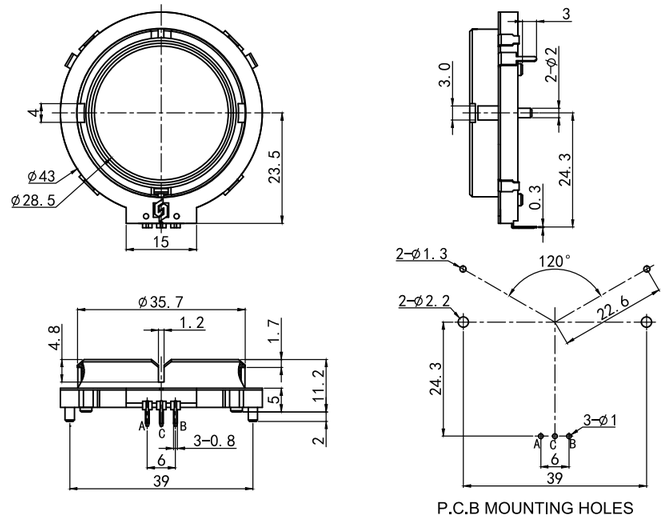

ENCODERS EC43		
Number of Pulses	脉冲数	20P
Number of detents	定位数(个)	20
Rotational Torque	旋转力矩	50~300gf.cm
Insulation resistance	绝缘阻抗	100MΩ 1 Minute at DC 250V
Dielectric Voltage	耐电压	1 Minute at AC 300V
Rotational Life	旋转寿命	30,000 cycles

EC50/EC56 Series
INCREMENTAL ENCODER

MODEL 品名	DIMENSIONS 尺寸	UNIT:mm

EC500101X5A-HA1

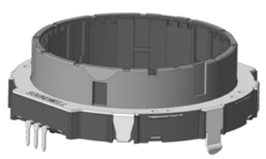

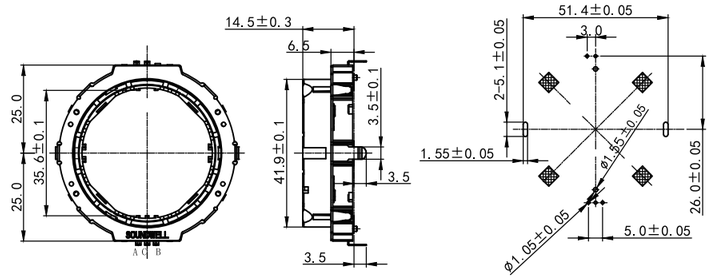

EC560101X5A-PA1

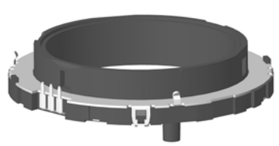

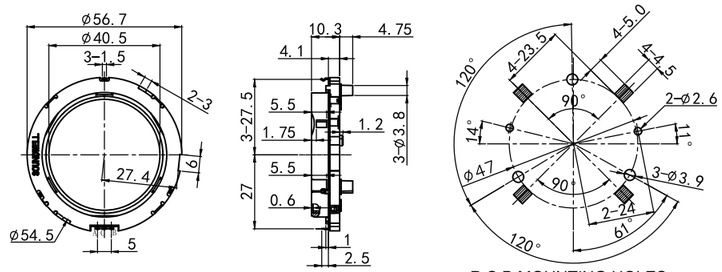

EC560101X5A-HA1

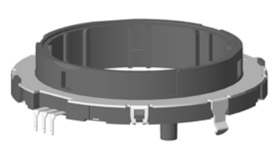

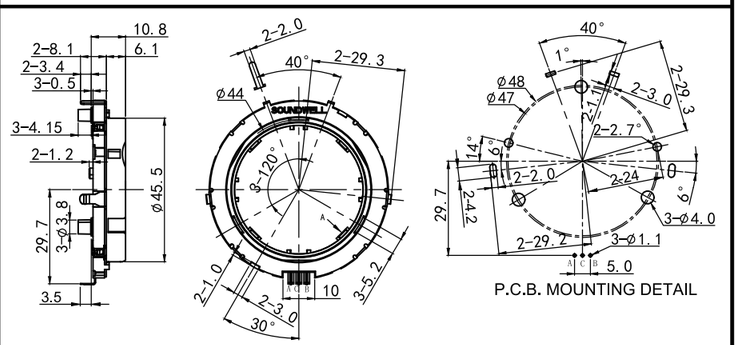

Items 项目		EC50	EC56
Number of Pulses	脉冲数	9P	15P
Number of detents	定位数	18	30
Rotational Torque	旋转力矩	50～400gf.cm	30～400gf.cm
Rating Power	额定功率	DC 5V 10mA	DC 5V 10mA
Insulation Resistance	绝缘阻抗	100MΩ 1 Minute at DC 500V	
Dielectric Voltage	耐电压	1 Minute at AC 300V	
Rotational Life	旋转寿命	50,000次 Min	50,000次 Min

EC60/65 Series
INCREMENTAL ENCODER

MODEL 品名	DIMENSIONS 尺寸	UNIT:mm

EC600102X5A-HA1

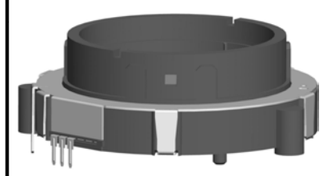

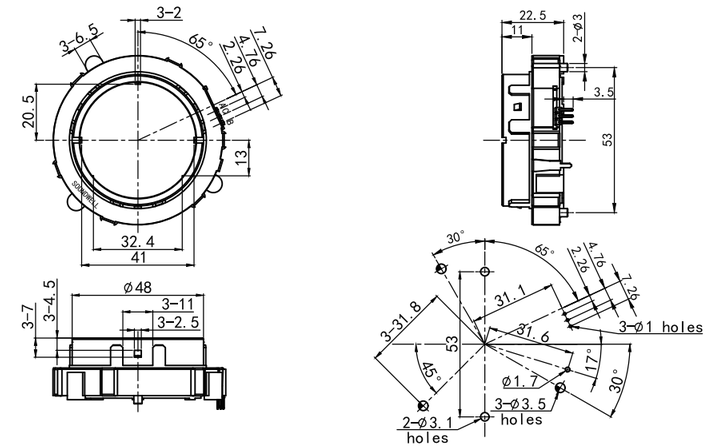

EC650101X5A-HA1

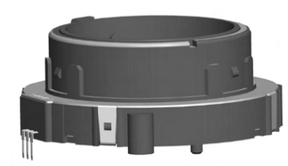

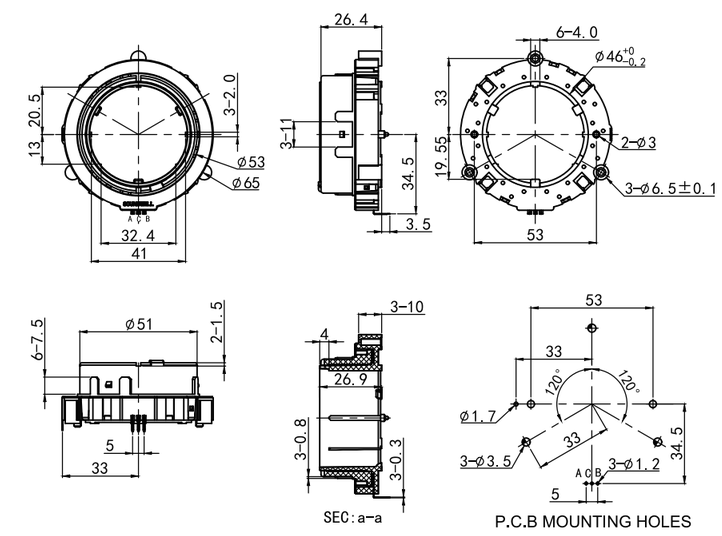

Items 项目		EC60	EC65
Number of Pulses	脉冲数	15P	15P
Number of detents	定位数	30	30
Rotational Torque	旋转力矩	400±200gf.cm	850±150gf.cm
Rating Power	额定功率	DC 5V 10mA	DC 5V 10mA
Insulation Resistance	绝缘阻抗	10MΩ 1 Minute at DC 110V	
Dielectric Voltage	耐电压	1 Minute at AC 110V	
Rotational Life	旋转寿命	50,000次 Min	30,000次 Min

EC18/21/25/28/33 Series
INCREMENTAL ENCODER

Resolution and Output signal					
SERIES 系列	RESOLUTION 分解能力	DETENT 定位	ROTATION DIRECTION 旋转方向	SIGNAL 信号	OUTPUT PHASE 输出波形
EC18	9P	18	C.W (顺时针方向)	A(Terminal A-C) B(Terminal B-C)	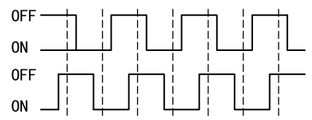
EC21	15P	30	C.W (顺时针方向)	A(Terminal A-C) B(Terminal B-C)	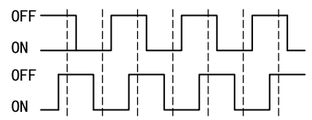
EC25	10P	20	C.W (顺时针方向)	A(Terminal A-C) B(Terminal B-C)	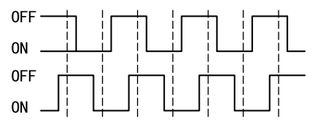
	20P	20	C.W (顺时针方向)	A(Terminal A-C) B(Terminal B-C)	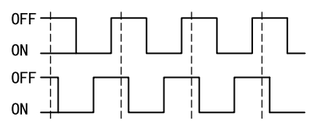
EC28	15P	30	C.W (顺时针方向)	A(Terminal A-C) B(Terminal B-C)	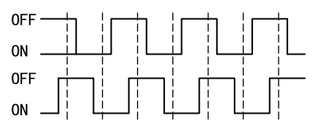
	18P	18	C.W (顺时针方向)	A(Terminal A-C) B(Terminal B-C)	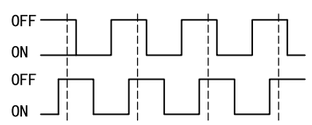
EC33	24P	24	C.W (顺时针方向)	A(Terminal A-C) B(Terminal B-C)	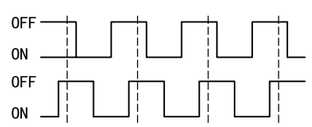

Note:The broken line shows detent position.
注明:虚线表示带卡点装置的卡点处位置。

EC35/40/43/50/56/60/65 Series
INCREMENTAL ENCODER

Resolution and Output signal					
SERIES 系列	RESOLUTION 分解能力	DETENT 定位	ROTATION DIRECTION 旋转方向	SIGNAL 信号	OUTPUT PHASE 输出波形
EC35	15P(正向)	30	C.W (顺时针方向)	A(Terminal A-C) B(Terminal B-C)	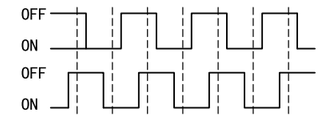
	15P(反向)	30	C.W (顺时针方向)	A(Terminal A-C) B(Terminal B-C)	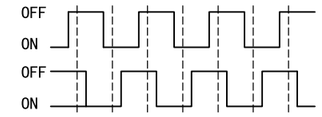
	18P	18	C.W (顺时针方向)	A(Terminal A-C) B(Terminal B-C)	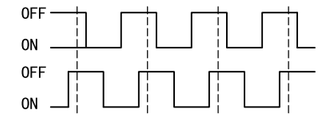
	20P	20	C.W (顺时针方向)	A(Terminal A-C) B(Terminal B-C)	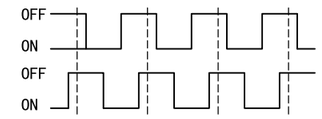
	10P	30	C.W (顺时针方向)	A(Terminal A-D) B(Terminal B-D) C(Terminal C-D)	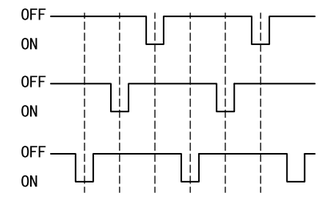
EC40	15P	30	C.W (顺时针方向)	A(Terminal A-C) B(Terminal B-C)	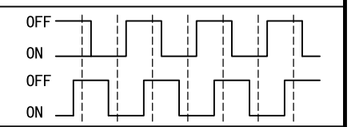
EC43	20P	20	C.W (顺时针方向)	A(Terminal A-C) B(Terminal B-C)	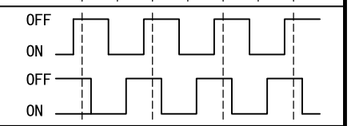
EC50	9P	18	C.W (顺时针方向)	A(Terminal A-C) B(Terminal B-C)	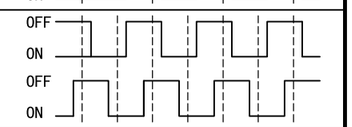
EC56	15P	30			
EC60 EC65	15P	30	C.W (顺时针方向)	A(Terminal A-C) B(Terminal B-C)	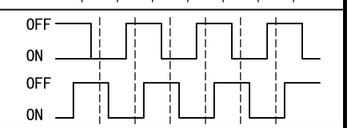

Note:The broken line shows detent position.
注明:虚线表示带卡点装置的卡点处位置。

Products Series Code Explanation
ABSOLUTE TYPE ENCODER

Absolute Type Encoder Series Code Explanation
绝对型编码器型号说明

(1) (2) (3) (4) (5) (6) (7) (8) (9)
ES 16 21 02 E 0 B - HA1 - 000

- Series 系列 — ES
- Size 外形尺寸 — 16
- Design Code 设计代号 — 21
- Flow NO.流水号 — 02
- Bushing 轴套 — E
- Output Signal Formal 输出信号形式 — 0
- Bracket 支架 — B
- Terminal 端子 — HA1
- Flow Code 电脑流水号 — 000

(1)&(2): Series & Size / 系列及外形尺寸。

SERIES 系列	EXPLANATION 型号说明	SIZE / 外形尺寸（mm/毫米）					
		10	16	18	20	46	
ES	ABSOLUTE TYPE 绝对式	◉	◉	◉	◉	◉	

(3)&(4)&(5)&(7):Design Code Flow NO. & Bushing & Bracket Code are Controlled by SOUNDWELL。
设计代号、 流水号、轴套及支架代号由本公司内部受控。

(6): Output Signal Formal. 输出波形。

C.W

TREM \ POS	1	2	3	4	5	6	7	8	9	10	11	12	13	14	15	16
①	0	1	1	0	0	1	1	0	0	1	1	0	0	1	1	0
②	0	0	1	1	1	1	0	0	0	0	1	1	1	1	0	0
③	0	0	0	0	1	1	1	1	1	1	1	1	0	0	0	0
④	0	0	0	0	0	0	0	0	0	1	1	1	1	1	1	1

1:ON
0:OFF

(8): Terminal:Controlled by SOUNDWELL。 端子：本公司内部受控。

(9): Flow Code: (Pulse、Number of detent、shaft、Request of exceptive) controlled by SOUNDWELL。
电脑流水号（分解能力、定位数、轴心、特殊要求)为我公司内部受控。

ES16/18 Series
ABSOLUTE ENCODER

MODEL 品名 | DIMENSIONS 尺寸 | UNIT:mm

ES160201A0A-HA1

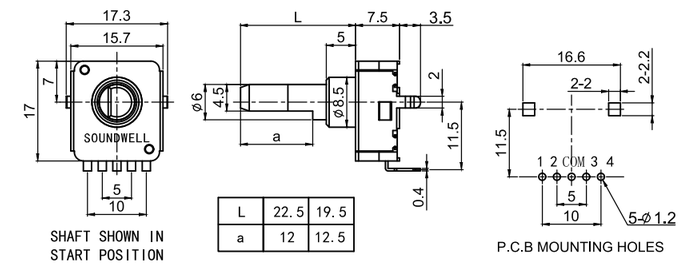

L	22.5	19.5
a	12	12.5

ES162102E☒A-VA1

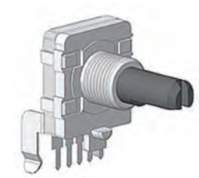

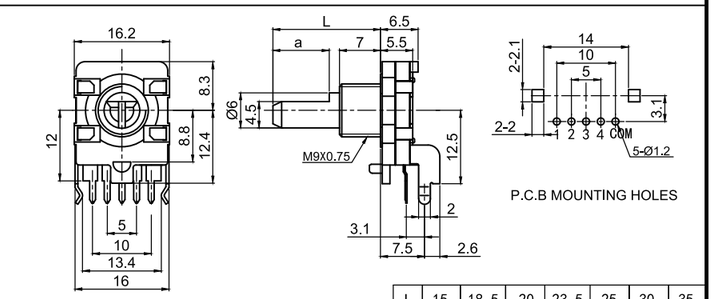

L	15	18.5	20	23.5	25	30	35
a	7	10.5	12	12	12	12	12

ES162102E☒B-HA1

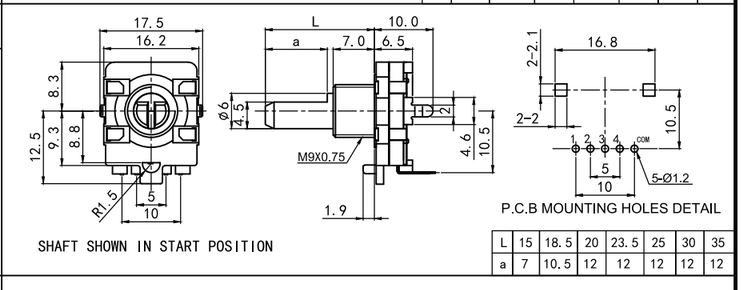

L	15	18.5	20	23.5	25	30	35
a	7	10.5	12	12	12	12	12

ES180102X0A-HA1

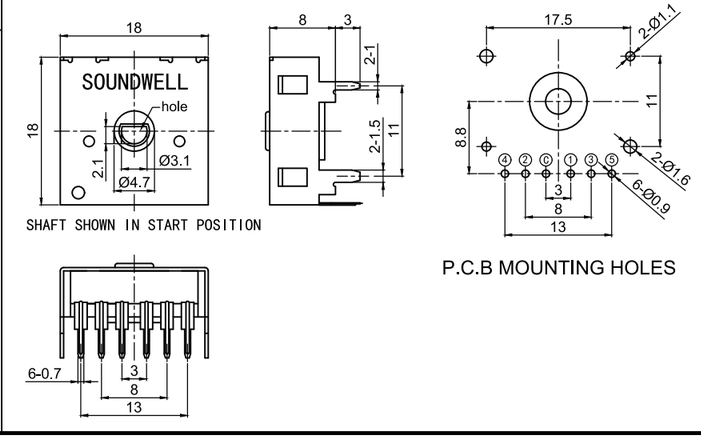

ES16/18 Series
ABSOLUTE ENCODER

Resolution and Output Signal 分解能力和输出信号

Series 系列	Resolution 分解能力	Detent 定位	Output Signal Formal 输出信号形式
ES16	12P	12	C.W → 1:ON 0:OFF
	16P	16	C.W → X=0 1:ON 0:OFF
	16P	16	C.W → X=1 1:ON 0:OFF
	16P	16	C.W → X=2 1:ON 0:OFF
ES1801	24P	24	C.W → 1:ON 0:OFF

C.W → 12P

TERM \ POS	1	2	3	4	5	6	7	8	9	10	11	12
①	1	0	1	1	0	0	0	0	0	0	0	0
②	0	1	1	0	0	1	1	1	1	0	0	0
③	0	1	1	1	1	1	0	0	1	1	0	0
④	0	0	0	0	0	0	0	1	1	1	1	0

C.W → X=0

TERM \ POS	1	2	3	4	5	6	7	8	9	10	11	12	13	14	15	16
①	0	1	1	0	0	1	1	0	0	1	1	0	0	1	1	0
②	0	0	1	1	1	1	0	0	0	0	1	1	1	1	0	0
③	0	0	0	0	1	1	1	1	1	1	1	1	0	0	0	0
④	0	0	0	0	0	0	0	0	1	1	1	1	1	1	1	1

C.W → X=1

TERM \ POS	1	2	3	4	5	6	7	8	9	10	11	12	13	14	15	16
①	0	0	0	0	0	1	0	0	1	1	1	1	1	1	1	1
②	0	0	0	0	1	1	1	1	1	1	1	1	0	0	0	0
③	0	0	1	1	1	1	0	0	0	0	1	1	1	1	0	0
④	0	1	1	0	0	1	1	0	0	1	1	0	0	1	1	0

C.W → X=2

TERM \ POS	1	2	3	4	5	6	7	8	9	10	11	12	13	14	15	16
①	0	1	0	1	0	1	0	1	0	1	0	1	0	1	0	1
②	0	0	1	1	0	0	1	1	0	0	1	1	0	0	1	1
③	0	0	0	0	1	1	1	1	0	0	0	0	1	1	1	1
④	0	0	0	0	0	0	0	0	1	1	1	1	1	1	1	1

C.W → ES1801

TERM \ POS	1	2	3	4	5	6	7	8	9	10	11	12	13	14	15	16	17	18	19	20	21	22	23	24
①	0	1	1	0	0	1	1	0	0	1	1	0	0	1	1	0	0	1	1	0	0	1	1	0
②	0	0	1	1	1	1	0	0	0	0	1	1	1	1	0	0	0	0	1	1	1	1	0	0
③	0	0	0	0	1	1	1	1	1	1	1	1	0	0	0	0	0	0	0	0	1	1	1	1
④	0	0	0	0	0	0	0	0	1	1	1	1	1	1	1	1	1	1	1	1	1	1	1	1
⑤	0	0	0	0	0	0	0	0	0	0	0	0	0	0	0	0	1	1	1	1	1	1	1	1

1:ON
0:OFF

ES16/ES1801 Encoders

Absolute Type Encoders Series Common Specification 绝对型编码器系列通用规格

Items 项目		ES16	ES1801
Operating Temperature	使用温度	-20℃～80℃	-20℃～80℃
Operating Torque	操作力矩	30～200gf.cm	100～300gf.cm
Shaft Push-Pull Strength	轴推拉强度	10Kgf	5Kgf
Rotational Life	旋转寿命	30,000 Cycles Min	
Rating Power	额定功率	DC 12V,4mA	
Insulation Resistance	绝缘阻抗	10MΩ 1 Minute at DC 50V	100MΩ 1 Minute at DC 100V
Dielectric Voltage	耐电压	1 Minute at AC 50V	
Contact Resistance	接触阻抗	First Period:100mΩ After the end of useful 1Ω	

ES18 Series
ABSOLUTE ENCODER

MODEL 品名 | DIMENSIONS 尺寸 | UNIT:mm

ES180302A0A-HA1

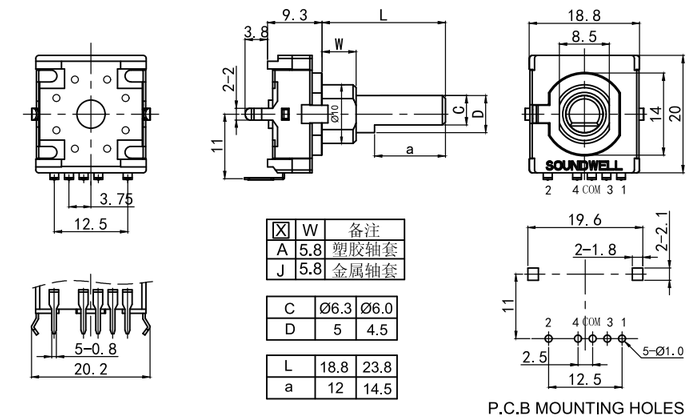

X	W	备注
A	5.8	塑胶轴套
J	5.8	金属轴套

C	Ø6.3	Ø6.0
D	5	4.5

L	18.8	23.8
a	12	14.5

P.C.B MOUNTING HOLES

ES18Z02J0A-HA1

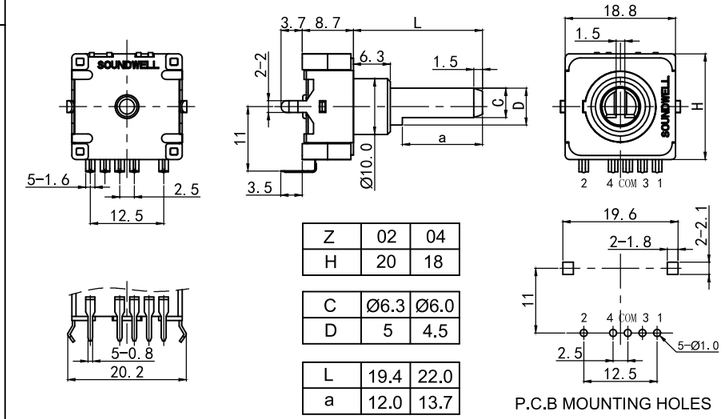

Z	02	04
H	20	18

C	Ø6.3	Ø6.0
D	5	4.5

L	19.4	22.0
a	12.0	13.7

P.C.B MOUNTING HOLES

ES180502A0A-HA1

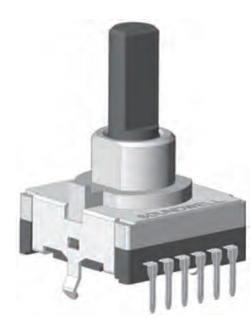

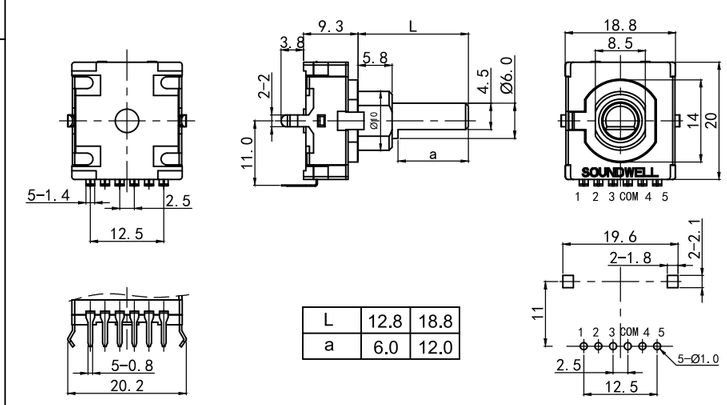

L	12.8	18.8
a	6.0	12.0

P.C.B MOUNTING HOLES

ES18 Series
ABSOLUTE ENCODER

Resolution and Output Signal 分解能力和输出信号

Series 系列	Resolution 分解能力	Detent 定位	Output Signal Formal 输出信号形式

C.W → ☒=0

ES180202	16P	16

TERM \ POS	1	2	3	4	5	6	7	8	9	10	11	12	13	14	15	16
①	0	1	1	0	0	1	1	0	0	1	1	0	0	1	1	0
②	0	0	1	1	1	1	0	0	0	0	1	1	1	1	0	0
③	0	0	0	0	1	1	1	1	1	1	1	1	0	0	0	0
④	0	0	0	0	0	0	0	0	1	1	1	1	1	1	1	1

1:ON
0:OFF

ES180302	4P	4

C.W →

TERM \ POS	1	2	3	4
1	0	1	1	0
2	0	0	1	1

1:ON
0:OFF

	10P	10

C.W →

TERM \ POS	1	2	3	4	5	6	7	8	9	10
1	0	1	1	0	0	1	1	0	0	0
2	0	0	1	1	1	1	0	0	0	0
3	0	0	0	0	1	1	1	1	1	0
4	0	0	0	0	0	0	0	0	1	1

1:ON
0:OFF

	12P	12

C.W →

TERM \ POS	1	2	3	4	5	6	7	8	9	10	11	12
1	0	1	1	0	0	1	1	0	0	1	1	0
2	0	0	1	1	1	1	0	0	0	0	0	0
3	0	0	0	0	1	1	1	1	1	1	0	0
4	0	0	0	0	0	0	0	0	1	1	1	1

1:ON
0:OFF

	16P	16

C.W →

TERM \ POS	1	2	3	4	5	6	7	8	9	10	11	12	13	14	15	16
1	0	1	1	0	0	1	1	0	0	1	1	0	0	1	1	0
2	0	0	1	1	1	1	0	0	0	0	1	1	1	1	0	0
3	0	0	0	0	1	1	1	1	1	1	1	1	0	0	0	0
4	0	0	0	0	0	0	0	0	1	1	1	1	1	1	1	1

1:ON
0:OFF

ES180402	16P	16

C.W →

TERM \ POS	1	2	3	4	5	6	7	8	9	10	11	12	13	14	15	16
1	0	1	1	0	0	1	1	0	0	1	1	0	0	1	1	0
2	0	0	1	1	1	1	0	0	0	0	1	1	1	1	0	0
3	0	0	0	0	1	1	1	1	1	1	1	1	0	0	0	0
4	0	0	0	0	0	0	0	0	1	1	1	1	1	1	1	1

1:ON
0:OFF

ES180502	24P	24

C.W →

TERM \ POS	1	2	3	4	5	6	7	8	9	10	11	12	13	14	15	16	17	18	19	20	21	22	23	24
1	0	0	0	0	1	1	1	1	1	0	0	1	1	0	0	1	1	1	0	0	0	0	1	1
2	0	0	0	0	0	0	0	0	1	1	1	1	1	1	1	1	0	0	0	0	0	0	0	0
3	0	0	1	1	1	1	0	0	0	0	0	0	1	1	1	1	1	1	1	1	0	0	0	0
4	0	1	1	0	0	1	1	1	1	1	0	0	0	0	1	1	1	0	0	1	1	0	0	0
5	0	0	0	0	0	0	0	1	1	1	1	1	1	1	1	1	1	1	1	1	1	1	1	0

1:ON
0:OFF

备注：**ES1802**为五金片结构，大尺寸；**ES1804**为五金片结构，小尺寸；
ES1803为基板结构；**ES1805**为基板结构，**24**档。

Absolute Type Encoders Series Common Specification

Items 项目		ES1803	ES1802/04	ES1805
Pluse Specification	脉冲规格	4P 10P 12P 16P	16P	24P
Rotational Torque	旋转力矩	300～700gf.cm		
Operating Temperature	工作温度	-30℃～+70℃		
Rating Voltage	额定电压	DC 10V 1mA		
Insulation Resistance	绝缘阻抗	100MΩ 1 Minute at DC 250V		
Dielectric Voltage	耐电压	1 Minute at AC 50V		
Insulation Resistance	接触阻抗	10Ω		
Rotational Life	旋转寿命	30,000次 Min		

ES10/20 Series
ABSOLUTE ENCODER

MODEL 品名 | DIMENSIONS 尺寸 | UNIT:mm

ES100101X0X-HA1

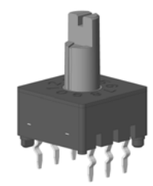

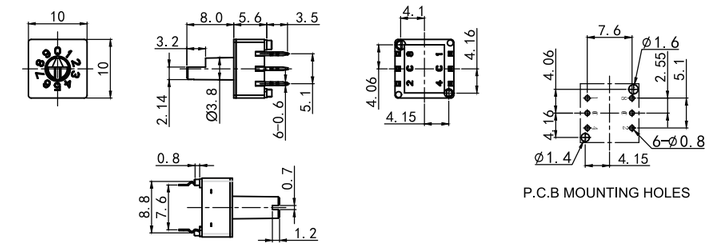

ES200102A0A-VA1

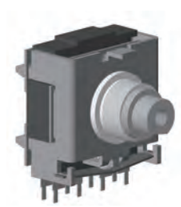

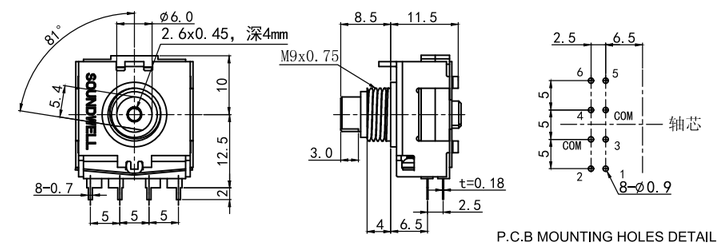

Series 系列	Resolution 分解能力	Detent 定位	Output Signal Formal(C.W) 输出信号形式（顺时针方向）

ES10	10P	10

TERM \ POS	0	1	2	3	4	5	6	7	8	9
1	0	1	0	1	0	1	0	1	0	1
2	0	0	1	1	0	0	1	1	0	0
4	0	0	0	0	1	1	1	1	0	0
8	0	0	0	0	0	0	0	0	1	1

1:ON
0:OFF

ES20	40P	40

TERM \ POS	1	2	3	4	5	6	7	8	9	10	11	12	13	14	15	16	17	18	19	20	21	22	23	24	25	26	27	28	29	30	31	32	33	34	35	36	37	38	39	40
1	0	1	1	0	0	1	1	0	0	1	1	0	0	1	1	0	0	1	1	0	0	1	1	0	0	1	1	0	0	1	1	0	0	1	1	0	0	1	1	0
2	0	0	1	1	1	1	0	0	0	0	1	1	1	1	0	0	0	0	1	1	1	1	0	0	0	0	1	1	1	1	0	0	0	0	1	1	1	1	0	0
3	0	0	0	0	1	1	1	1	1	1	1	1	0	0	0	0	0	0	0	0	1	1	1	1	1	1	1	1	0	0	0	0	0	0	0	0	1	1	1	1
4	0	0	0	0	0	0	0	0	1	1	1	1	1	1	1	1	1	1	1	1	1	1	1	1	0	0	0	0	0	0	0	0	0	0	0	0	0	0	0	0
5	0	0	0	0	0	0	0	0	0	0	0	0	0	0	0	0	1	1	1	1	1	1	1	1	1	1	1	1	1	1	1	1	1	1	1	1	1	1	1	1
6	0	0	0	0	0	0	0	0	0	0	0	0	0	0	0	0	0	0	0	0	0	0	0	0	0	0	0	0	0	0	0	0	1	1	1	1	1	1	1	1
COM	1	1	1	1	1	1	1	1	1	1	1	1	1	1	1	1	1	1	1	1	1	1	1	1	1	1	1	1	1	1	1	1	1	1	1	1	1	1	1	1

1:ON
0:OFF

Items项目		ES10	ES20
Pluse Specification	脉冲规格	10P	40P
Rotational Torque	旋转力矩	100～300gf.cm	300～900gf.cm
Operating Temperature	工作温度	-40℃～+85℃	-10℃～+60℃
Rating Voltage	额定电压	DC 24V,25mA	DC 15V,0.1mA
Insulation Resistance	绝缘阻抗	100MΩ 1 Minute at DC 250V	
Dielectric Voltage	耐电压	1 Minute at AC 250V	
Insulation Resistance	接触阻抗	100mΩ Max	1Ω Max
Rotational Life	旋转寿命	1,000 Cycles Min	10,000Cycles Min

ES46 Series
ABSOLUTE ENCODER

MODEL 品名	DIMENSIONS 尺寸	UNIT:mm

ES460102X0X-HAR

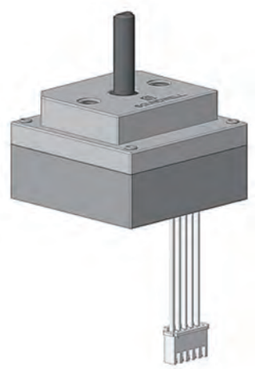

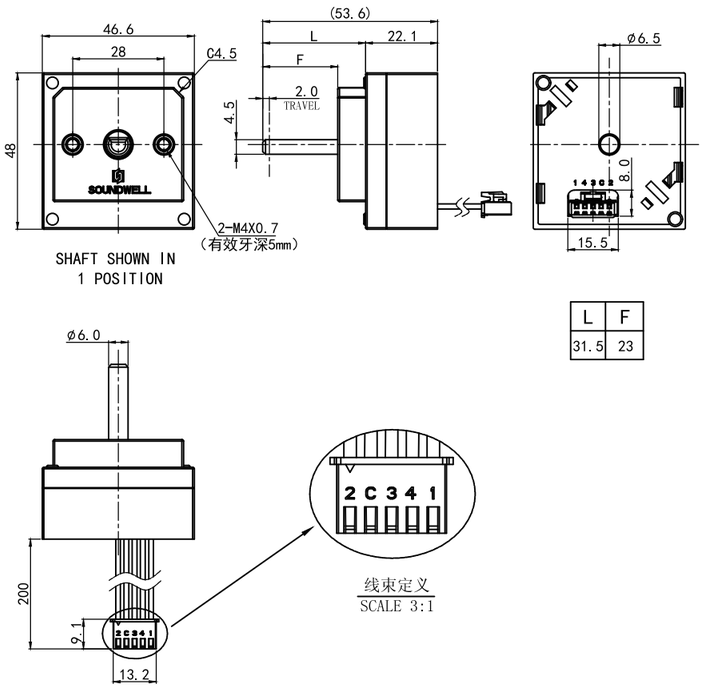

L	F
31.5	23

START POSITON　　CODE　　C.W→　1:ON　0:OFF

TERM \ POS	1	2	3	4	5	6	7	8	9	10
1	0	1	1	0	0	1	1	0	0	0
2	0	0	1	1	1	1	0	0	0	0
3	0	0	0	0	1	1	1	1	1	0
4	0	0	0	0	0	0	0	0	1	1
C	1	1	1	1	1	1	1	1	1	1

Items项目		ES46
Pluse Specification	脉冲规格	10P
Rotational Torque	旋转力矩	1000～1300gf.cm
Operating Temperature	工作温度	-30℃～+70℃
Rating Voltage	额定电压	DC 10V 1mA
Insulation Resistance	绝缘阻抗	100MΩ 1 Minute at DC 250V
Dielectric Voltage	耐电压	1 Minute at AC 50V
Press stroke	按压行程	2mm-2.5mm
Insulation Resistance	接触阻抗	10Ω
Rotational Life	旋转寿命	30,000次 Min

Products Series Code Explanation
ME/MA/EG ENCODER

(1) (2) (3) (4) (5) (6) (7) (8) (9) (10) (11) (12) (13) (14) (15) (16)
ME 38 01 01 M 3 X-C A 5-000(1024P-FA 200 B 120)

(1)：Series 系列。

ME:磁电增量型编码器　Magnetic Incremental Encoder
MA:磁电绝对型编码器　Magnetic Absolute Encoder
EG:光电增量型编码器　Optical Incremental Encoder
EA:光电绝对型编码器　Optical Absolute Encoder

(2)：Size　外形尺寸。

SERIES 系列	EXPLANATION 型号说明	SIZE / 外形尺寸（mm/毫米）								
		20	23	28	38	45	50			
ME/MA	Magnetic Encoder 磁电型	◉	◉	◉	◉	◉	◉			

SERIES 系列	EXPLANATION 型号说明	SIZE / 外形尺寸（mm/毫米）								
		13	15	16	34	38	41	56	35	45
EG	Optical Incremental Encoder 光电增量型	◉	◉	◉	◉	◉	◉	◉		
EA	Optical Absolute Encoder 光电绝对型								◉	◉

(3)&(4)：Design Code 设计代号。

(5)：Bushing 轴套

(6)：Signal Type 信号方式或通信方式
1-A ；
2-- A、B ；
3-- A、B、Z ；
6-- A、B、Z、$\bar{A}$、$\bar{B}$、$\bar{Z}$

S——SSI ；
B——BISS ；
E——EnDAT ；
T——多摩川；
H——HIPERFACE ；
M——modbus ；

(7):Bracket 支架

(8):Input Style 输出电路或通讯方式
A--互补型输出；
B--电压输出；
C--集电极开路输出；
D--RS422输出；
E--TTL输出；

S——SPI；
I——IIC；
C——CAN；
F——RS485；
R——RS422；
2——RS232；
U——UART；
A——USART；

(9):Interface Code 接口代码
A--电缆侧出　B--电缆后出
C--航插侧出　D--航插后出
E--端子输出

(10):Voltage Code 电压代码
5--dc 5v
1--dc 5~26v

(11)：Flow Code：（Resolution、Number of detent、shaft、Request of exceptive)
流水号:(分解能、定位数、轴心、特殊要求).

(12):Pulses　脉冲数

(13)：Shaft Style 轴形状

(14)：Shaft Length 轴长度

(15)：Shaft Material Code 轴材质代码
A--不锈钢　C--铜

(16)：Working Length of Shaft
轴工作部位长度

EG13/15/16/34/38 Series
OPTICAL INCREMENTAL ENCODER

MODEL 品名	DIMENSIONS 尺寸	UNIT:mm

EG13

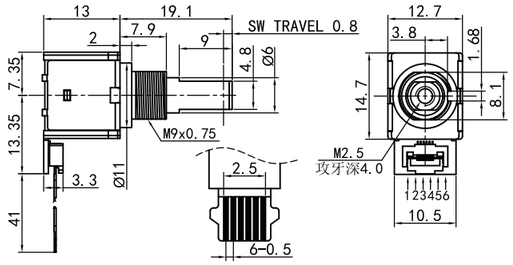

线束定义	
序号	描 述
1	DC 5V
2	编码器输出信号A
3	编码器输出信号B
4	开关S1
5	开关S2
6	GND

EG15

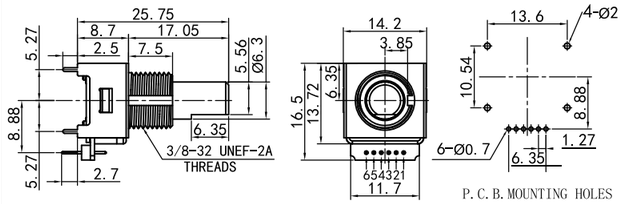

引脚定义	
序号	描 述
1	DC 5V
2	开关S1
3	开关S2
4	编码器信号A
5	编码器信号B
6	GND

EG16

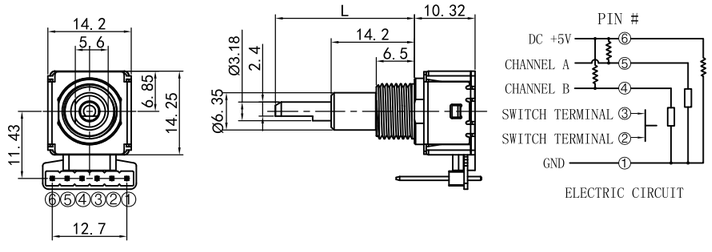

EG34

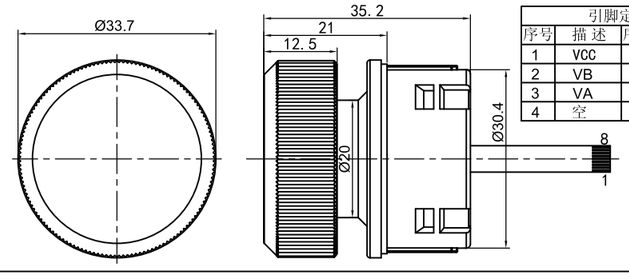

引脚定义			
序号	描 述	序号	描 述
1	VCC	5	空
2	VB	6	空
3	VA	7	空
4	空	8	空

EG38

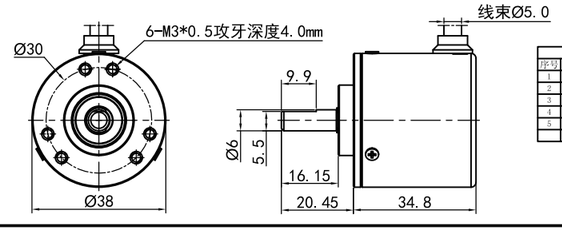

端子/线束接线表		
序号	线束颜色	定义
1	黑色-26AWG	5V-GND
2	红色-26AWG	5V
3	白色-26AWG	A
4	绿色-26AWG	B
5	屏蔽线	PE（屏蔽）

EG41/EG56 Series
OPTICAL INCREMENTAL ENCODER

MODEL 品名	DIMENSIONS 尺寸	UNIT:mm

EG41

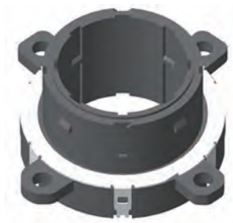

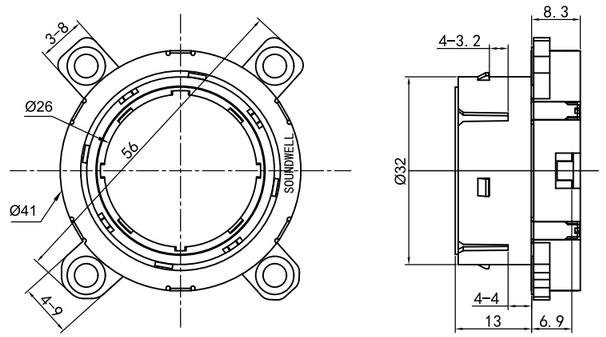

EG56

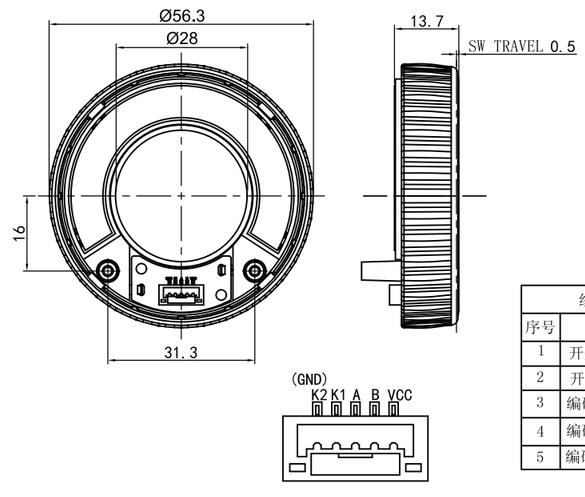

线束定义	
序号	描 述
1	开关K2/编码器GND
2	开关K1
3	编码器输出信号“A”
4	编码器输出信号“B”
5	编码器VCC(DC 5V)

Items 项目	EG41	EG56
Pluse Specification 脉冲规格	8P9	15P6
Rotational Torque 旋转力矩	100～200gf.cm	250～450gf.cm
Push switch 开关按压力	/	600～1000gf
Operating Temperature 工作温度	-40℃～+85℃	-40℃～+85℃
Rating Voltage 额定电压	DC 5V 10mA	DC 5V 26mA
Insulation Resistance 绝缘阻抗	100MΩ 1 Minute at DC 100V	10MΩ 1 Minute at DC 250V
Dielectric Voltage 耐电压	1 Minute at AC 250V	1 Minute at AC 300V
Rotational Life 旋转寿命	300,000次 Min	50,000次 Min
Push switch 开关按压寿命	/	20,000次 Min

EG Series
OPTICAL INCREMENTAL ENCODER

Resolution and Output signal

SERIES 系列	RESOLUTION 分解能力	DETENT 定位	ROTATION DIRECTION 旋转方向	SIGNAL 信号	OUTPUT PHASE 输出波形
EG13	8P	16	C.W (顺时针方向)	A(Terminal A-C)	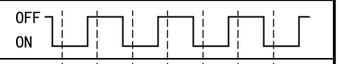
				B(Terminal B-C)	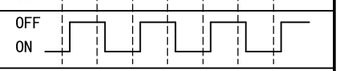
EG15	6P	24	C.W (顺时针方向)	A(Terminal 5-1)	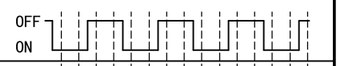
				B(Terminal 4-1)	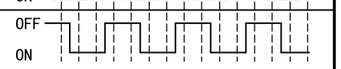
EG16	6P	24	C.W (顺时针方向)	A(Terminal ⑤-①)	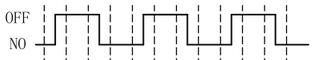
				B(Terminal ④-①)	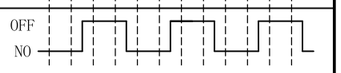
EG34	10P	20	C.W (顺时针方向)	A(Terminal A-C)	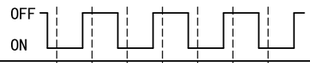
				B(Terminal B-C)	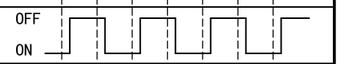
EG38	200P 可定制	/	C.W (顺时针方向)	A(Terminal A-C)	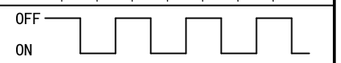
				B(Terminal B-C)	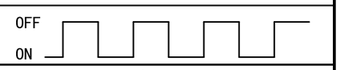
EG41	/	20	C.W (顺时针方向)	A(Terminal A-C)	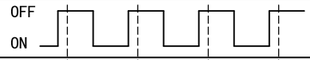
				B(Terminal B-C)	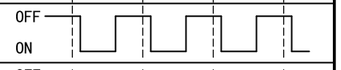
EG56	15	30	C.W (顺时针方向)	A(Terminal A-C)	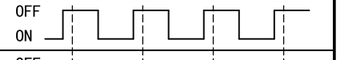
				B(Terminal B-C)	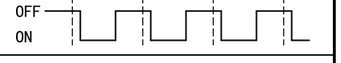

Note:The broken line shows detent position.
注明:虚线表示带卡点装置的卡点处位置。

Items 项目	EG13	EG15	EG16	EG34	EG38
Pluse Specification 脉冲规格	8P9	15P6	6P5	10P4	Max 1000P
Rotational Torque 旋转力矩(gf.cm)	100～200	55～125	55～125	400~900	Max 1 mN.m
Push switch 开关按压力	250～850	400～620	400～620	无	无
Operating Temperature 工作温度	-40℃～+85℃	-25℃～+85℃	-40℃～+85℃	-40℃～+120℃	-20℃～+85℃
Rating Voltage 额定电压	DC 5V 10mA	DC 5V 10mA	DC 5V 10mA	DC 5V 10mA	DC 5V 20mA
Insulation Resistance 绝缘阻抗	100MΩ 1 Minute at DC 100V				
Dielectric Voltage 耐电压	1 Minute at AC 250V				
Rotational Life 旋转寿命	300,000次	1,000,000次	1000,000次	100,000次	2,000,000次
Push switch 开关按压寿命	50,000次	1,000,000次	1000,000次	无	无

EA Series
OPTICAL ABSOLUTE ENCODER

MODEL 品名 DIMENSIONS 尺寸 UNIT:mm

EA35

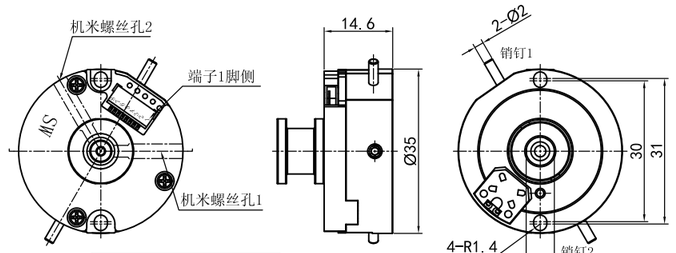

端子/线束接线表

序号	线束颜色	定义
1	红色-26AWG	5V
2	黑色-26AWG	5V-GND
3	蓝色-26AWG	485+
4	黄色-26AWG	485-
5	棕色-26AWG	BATT
6	白色-26AWG	BATT-GND
7	NC	
8	屏蔽线	PE（屏蔽）

EA45

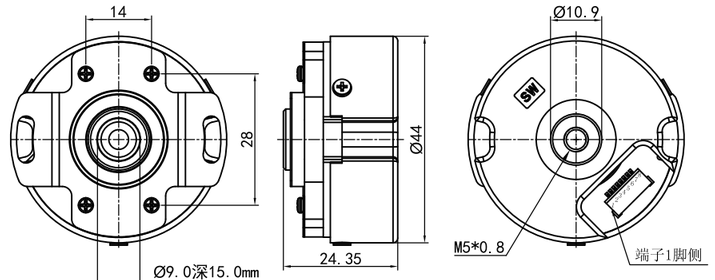

端子/线束接线表

序号	线束颜色	定义
1	红色-26AWG	5V
2	黑色-26AWG	5V-GND
3	蓝色-26AWG	485+
4	黄色-26AWG	485-
5	棕色-26AWG	BATT
6	白色-26AWG	BATT-GND
7	NC	
8	屏蔽线	PE（屏蔽）

ENCODERS EA

Resolution Ratio 分辨率	单圈最大23bit ，多圈16bit
Communication Mode 通讯接口	RS485
Incoming Current 输入电流	Max 100 mA
Working Voltage 工作电压	DC 5V
Break-out Torque 启动扭矩	Max 1mN.m
Maximum Speed 最大转速	3000rmp
Operating Temperature 工作温度	-20℃～105℃

EJ39 Series
MAGNETIC INCREMENTAL ENCODER

MODEL 品名	DIMENSIONS 尺寸	UNIT:mm

EJ39

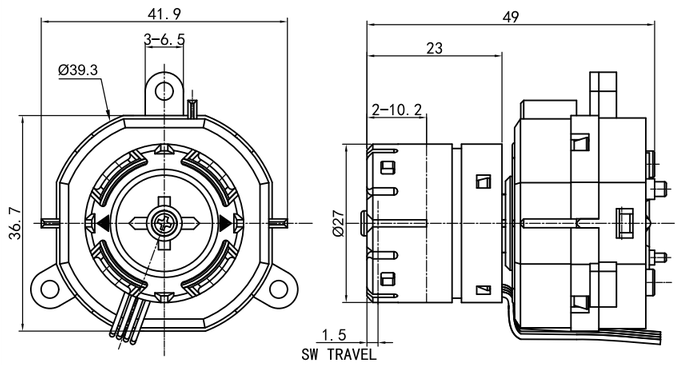

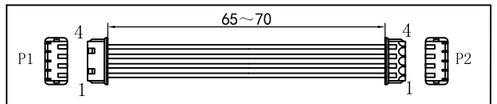

编码器线束定义			
P1	P2	Colou	Definition
1	1	Red	+Vcc (DC 3～5V)
2	2	Black	GND
3	3	White	OUTPUT "A"
4	4	White	OUTPUT "B"

EJ39 Resolution and Output signal

EJ39	8P	16	C.W (顺时针方向)	A(Terminal A-C)	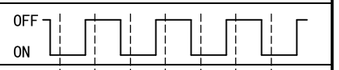
				B(Terminal B-C)	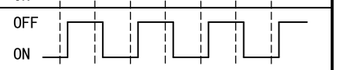

ENCODERS EJ39

操作方式	操作功能	脉冲数/定位数	操作力	开关行程	寿命(周)
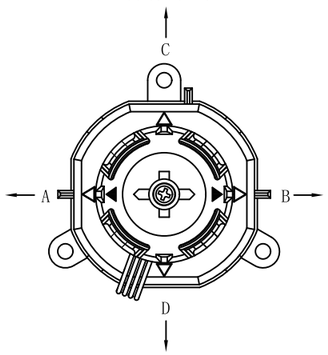	Rotate: Encoder 4-Direction: Switch Push: Switch	9/18	Rotate: 400±100 400±gf.cm 4-Direction: 500±150 gf.cm Push: 600±150 gf	4-Direction: 3.5° Push: 1.5 mm	100,000

ME Series
MAGNETIC INCREMENTAL ENCODER

MODEL 品名	DIMENSIONS 尺寸	UNIT:mm

ME11

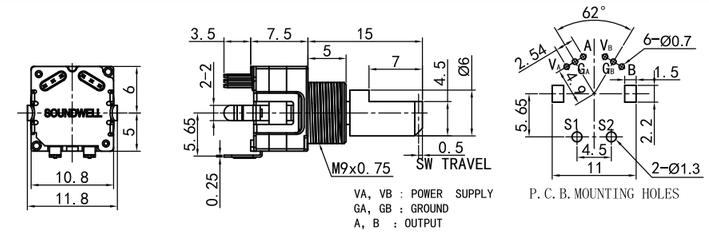

ME25

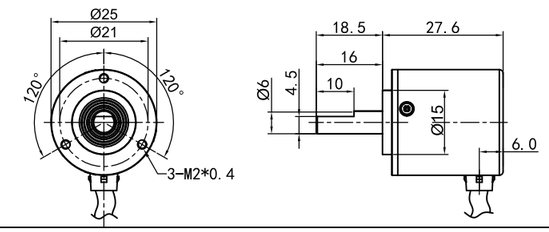

ME28

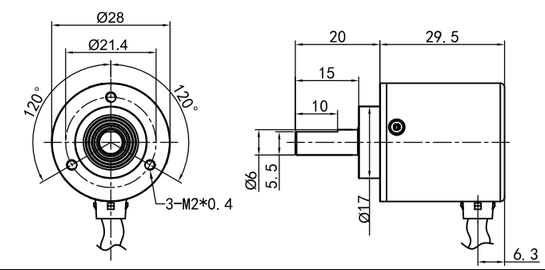

ME38

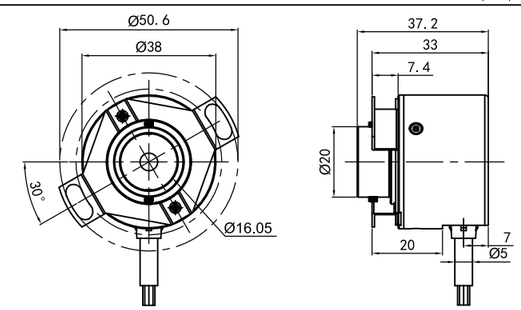

ME50

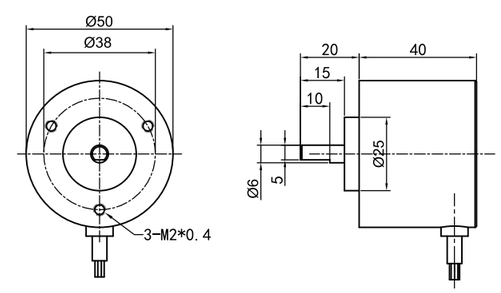

ME Series
MAGNETIC INCREMENTAL ENCODER

Resolution and Output signal

■电气性能

输出方式	集电极开路输出	电压输出	互补型输出	长线驱动输出
额定电压Vcc	5～26	5～26	5～26	5～26
消耗电流	Max 70mA	Max 70mA	Max 70mA	Max 100mA
负载电流	40mA	40mA	40mA	40mA
输出高电平	70%Vcc	Min Vcc-2.5v	Min Vcc-1.5v	Min 3.4v
输出低电平	Max 0.4v	Max 0.4v	Max 0.8v	Max 0.4v
响应时间	Max 1us	Max 1us	Max 1us	Max 1us
响应频率	300kHz	300kHz	300kHz	300kHz
输出电位差	T/4±T/8			

■机械性能

启动扭矩	Max 1 mN.m
惯性力矩	$1x10^{-6}$ kg.m^2
最大转速	5000r/min
轴负荷	径向60N 轴向40N
轴材质	铜
外壳材质	铝合金 煲黑

■增量型编码器输出

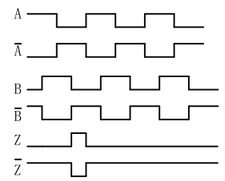

■环境性能

工作温度	-40℃~85℃
储存温度	-30℃~85℃
振动	10G 10~2000Hz XYZ 各2h
冲击	50G/11ms
防护等级	IP54 反接保护

■接线

外部接线时，请注意不要错误连线；
A,B,Z输出信号线不能触碰Vcc电源；
黑色屏蔽线接地。

	线色	端子名		线色	端子名
1	浅蓝	Vcc +5v	8	棕	/A
2	黑	GND+Shied	9	粉红	W
3	黄	Z	10	浅绿	/W
4	绿	/Z	11	灰	V
5	红	B	12	白	/V
6	橙	/B	13	蓝	U
7	黑	A	14	紫	/U

■UVW输出(1~16对极)

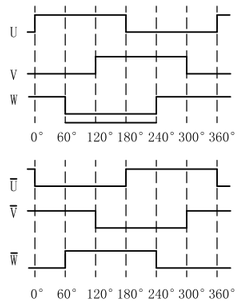

■PWM输出

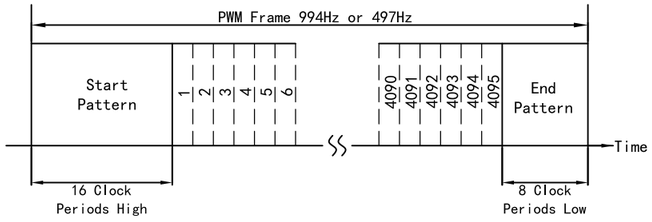

ENCODERS ME11

Rotational Torque 旋转力矩	100～200 gf.cm
Push switch 开关按压力	250～850 gf
Operating Temperature 工作温度	-40℃～+85℃
Rating Voltage 额定电压	DC 5V 10mA
Insulation Resistance 绝缘阻抗	100MΩ 1 Minute at DC 100V
Dielectric Voltage 耐电压	1 Minute at AC 250V
Life 寿命	Rotational :300,000次 Push:200，000次

SERIES 系列	RESOLUTION 分解能力	DETENT 定位	ROTATION DIRECTION 旋转方向	SIGNAL 信号	OUTPUT PHASE 输出波形
ME11	8P	16	C.W (顺时针方向)	A(Terminal A-C)	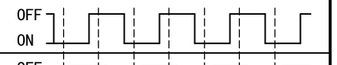
				B(Terminal B-C)	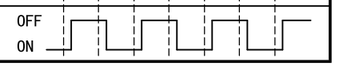

MA Series
MAGNETIC ABSOLUTE ENCODER

MODEL 品名 | DIMENSIONS 尺寸 | UNIT:mm

MA20

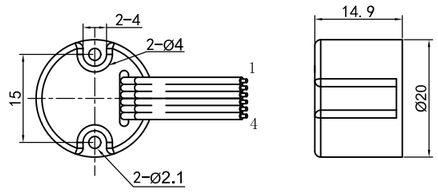

NO.	端子名
1	电源（+Vcc）
2	GND
3	SCC
4	SDA

MA23

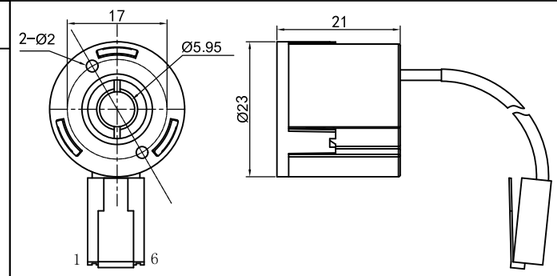

NO.	线色	端子名
1	白	电源（+Vcc）
2	黑	CSN
3	红	GND
4	绿	SCK
5	黄	MISO
6	蓝	MOSI

MA38

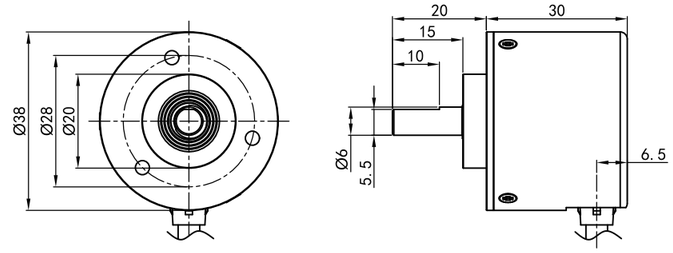

MA45

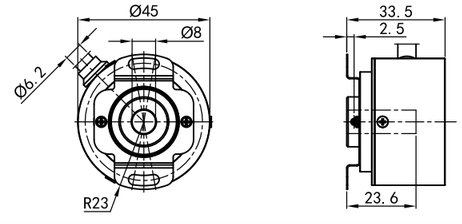

端子/线束接线表

序号	线束颜色	定义
1	黑色-26AWG	5V-GND
2	红色-26AWG	5V
3	棕色-26AWG	BATT
4	白色-26AWG	BATT-GND
5	蓝色-26AWG	485+
6	黄色-26AWG	485-
7	屏蔽线	PE（屏蔽）

ENCODERS MA

Resolution Ratio 分辨率	单圈最大17bit ，多圈16bit
Communication Mode 通讯接口	IIC、SPI、RS485
Incoming Current 输入电流	Max 15 mA
Working Voltage 工作电压	DC 5~30V
Break-out Torque 启动扭矩	Max 1mN.m
Maximum Speed 最大转速	30000rmp
Operating Temperature 工作温度	-30℃ ～ 85℃

MA46/52 Series
INTEGRATED MODULES

MODEL 品名	DIMENSIONS 尺寸	UNIT:mm

MA46

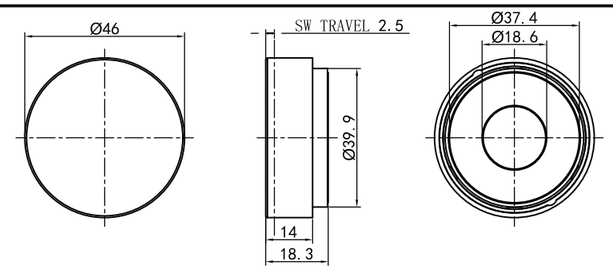

MA52

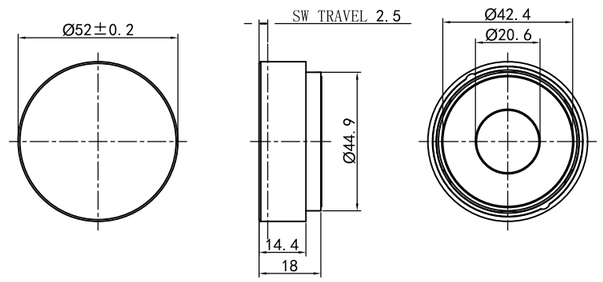

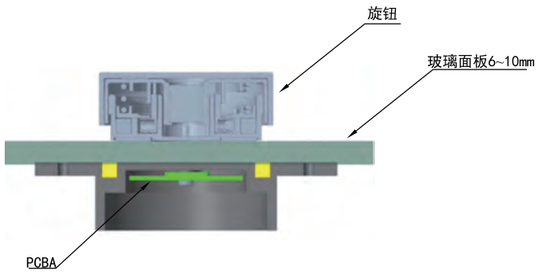

可分离式旋钮主要特点及功能：
（1）旋钮部分可移动分离；
（2）旋转旋钮有编码功能；
（3）按压旋钮有开关功能；
（4）编码功能和开关功能都是非接触式，使用寿命长；
（5）旋钮使用时可以自动吸附至感应区。

ENCODERS MA46/52

Pluse Specification	脉冲规格	Max 12bit
Total Rotational Angle	旋转角度	360°
Rotational Torque	旋转力矩	200～400gf.cm; 100～300gf.cm
Switch Force	开关按压力	500～800gf; 350-650gf
Operating Temperature	工作温度	-25℃～90℃
Rating Power	额定功率	DC 5V 15mA
Insulation Resistance	绝缘阻抗	100MΩ 1 Minute at DC 250V
Dielectric Voltage	耐电压	1 Minute at AC 300V
Rotational Life	旋转寿命	100,000次 Min
Switch Life	开关按压寿命	100,000 cycles Min

Products Series Code Explanations
ROTARY POTENTIOMETERS

Rotary Series Code Explanation
旋转电位器型号说明

(1) (2) (3) (4) (5) (6) (7) (8) (9) (10) (11) (12) (13) (14) (15) (16) (17)

RD 16 10 G0 A 0 X-VA1-000(B104 Q 1-KB 200 D 115)

- Series 系列
- Diameter 直径
- Design Code 设计代号
- Circuit 电路
- Bushing 轴套
- Terminal Position 端子配位
- Bracket 支架
- Terminal 端子
- Flow code 电脑流水号
- LINE 线性
- RESISTANCE 阻值代码

(1)&(2): Series & Diameter / 系列及直径。

SERIES 系列	EXPLANATION	型号说明
RA	INSERT TYPE	塑封式
RB	INSULATED SHAFT TYPE	绝缘轴
RD	METAL SHAFT TYPE	金属轴
RM	MOTOR-DRIVEN TYPE	微电机式
PT	THROUGH TYPE	贯通轴

(3) Design code 设计代号由本公司内部受控。

(4): Circuit / 电路。

(5)&(6)&(7): Bushing, Terminal position, Bracket code are controned by SOUNDWELL.
轴套、端子配位及支架代号由本公司内部受控。

(8): Terminal:Controned by SOUNDWELL /
端子:本公司受控。

(9): Flow code (Resistance 、 Taper、Material、Detent、shaft and Request of exceptive）
Controned by SOUNDWELL。
电脑流水号（阻值、线性、材质、定位、轴心及特殊要求)为我司内部受控。

(10)&(11)：LINE & RESISTANCE 线性和阻值

(12)：Ag Layer's Finish 银层的表面处理

代码	说明
P	银层表面不做抗硫化处理
Q	银层刷子末端停留位和铆端子处不做处理，其余位置做抗硫化处理。
T	银层铆端子处不做处理，其余位置做抗硫化处理。

(13)：Number of Click 定位数

代码	定位数
0	0
1	1
4	11
8	21
7	41

(14)：Shaft Style 轴形状

(15)：Shaft Length 轴长度

(16)：Shaft Material Code 轴材质代码

(17)：Working Length of Shaft
轴工作部位长度

RA0901 Series
ROTARY POTENTIOMETER

MODEL 品名 | **DIMENSIONS 尺寸** | **UNIT:mm**

RA0901NOX0Z-VAX

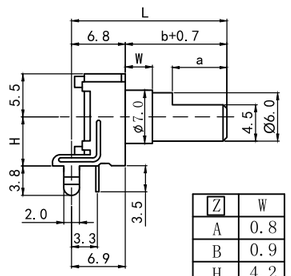

Z	W
A	0.8
B	0.9
H	4.2
J	4.5

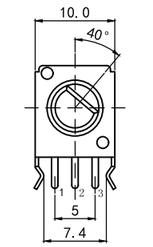

SHAFT SHOWN IN FULL C.C.W. POSITION

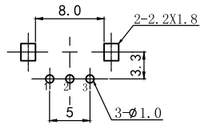

P.C.B. MOUNTING HOLES DETAIL

X	H
1	6.5
2	10

RA0901NOX0Z-HA1

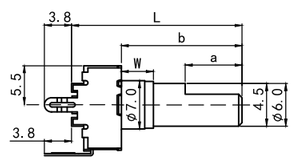

Z	W
D	0.8
K	4.5

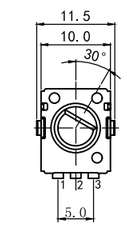

SHAFT SHOWN IN FULL C.C.W. POSITION

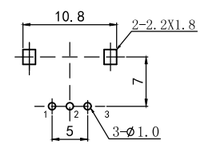

P.C.B. MOUNTING HOLES DETAIL

RA0901NOU0Q-HA1

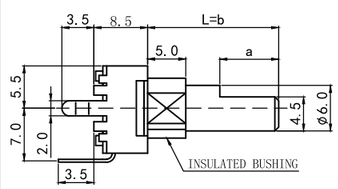

L	26.5	21.5	16.5	16.5	15	11.5	25.5
a	12	12	11	7	7	6.5	12

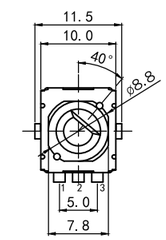

SHAFT SHOWN IN FULL C.C.W. POSITION

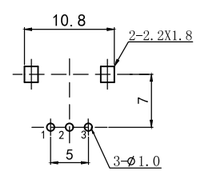

P.C.B. MOUNTING HOLES DETAIL

RA0901NOC0Q-HA1

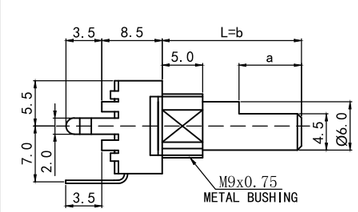

L	26.5	21.5	16.5	16.5	15	11.5	25.5
a	12	12	11	7	7	6.5	12

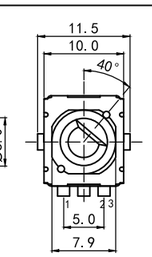

SHAFT SHOWN IN FULL C.C.W. POSITION

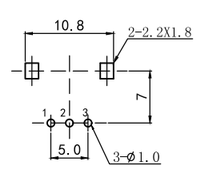

P.C.B. MOUNTING HOLES DETAIL

RA0901 Series
ROTARY POTENTIOMETER

RA0901 SERIES INSULATED SHAFT TYPE

CATEGORIES	DIMENSIONS UNIT:mm

V-TYPE

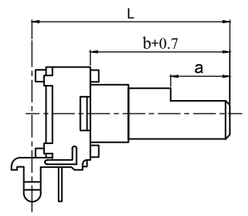

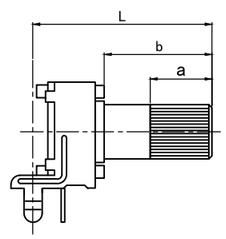

H-TYPE

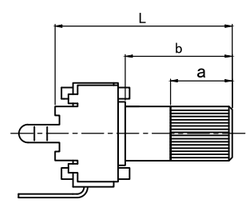

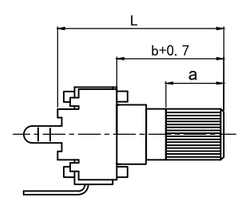

注："H-TYPE"指卧式；"V-TYPE"指立式。

FA-TYPE

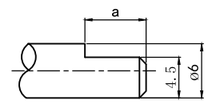

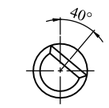

SHAFT SHOWN IN FULL C.C.W POSITION

L	15	20	25	30	35
b	7.5	12.5	17.5	22.5	27.5
a	6	7	12	12	12

KT-TYPE

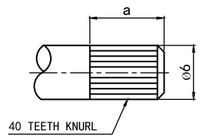

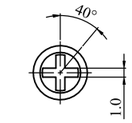

SHAFT SHOWN IN FULL C.C.W POSITION

L	15	20	25	30	35
b	7.5	12.5	17.5	22.5	27.5
a	6	7	12	12	7

KS-TYPE

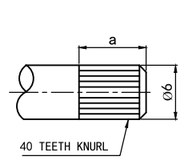

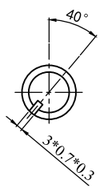

SHAFT SHOWN IN FULL C.C.W POSITION

L	15	20	25	30
b	7.5	12.5	17.5	22.5
a	6	7	12	12

KX-TYPE

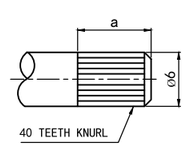

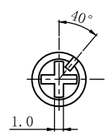

SHAFT SHOWN IN FULL C.C.W POSITION

L	15	20	25	30	35
b	7.5	12.5	17.5	22.5	27.5
a	6	7	12	12	7

RA0901 Series
ROTARY POTENTIOMETER

RA0901 SERIES COMMON SPECIFICATION

MECHANICAL CHARACTERISTIC 机械特性			
Total Rotational Angle	旋转角度	280°±10°	300°±10°
Rotational Torque	旋转力矩	10~100gf.cm	
Number of Detents	定位数目	1/11/21	
Click Slip Out Force	定位推动力	30~150gf.cm	
Shaft Stop Strength	轴止档强度	≥3Kgf.cm	
Push & Pull Strength	轴推拉强度	≥3Kgf	
Shaft Wobble (mm p-p)	轴摆动	Within (0.7x L/20)mm p-p	L=Shaft Length
		Within bushing(0.7x L/30)mm p-p	
ELECTRICAL CHARACTERISTIC 电气特性			
Total Resistance Range	总阻及误差	1KΩ＜R＜1MΩ,±20%;1KΩ≥R or R≥1MΩ,±30%;	
Resistance Taper	电阻特性曲线	Refer to Appendix I	
Rating Power	额定功率	≤0.05W	
Max. Operating Voltage	最大工作电压	50V AC / 20V DC	
Residual Resistance	残留电阻	Refer to Appendix I	
Rotational Noise	旋转杂音	≤100mV	
Insulation Resistance	绝缘电阻	100MΩ 1 Minute at DC 250V	
Dielectric Voltage	耐电压	1 Minute at AC 250V	
ENDURANCE CHARACTERISTIC 耐久性能			
Rotational Life	旋转寿命	10,000 cycles Min	

RA0901 SERIES CIRCUIT DIAGRAM

NO

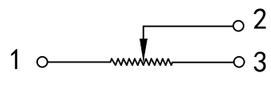

RA0909/0918 Series
ROTARY POTENTIOMETER

MODEL 品名	DIMENSIONS 尺寸 UNIT:mm
RA0909NOA0X-VA1	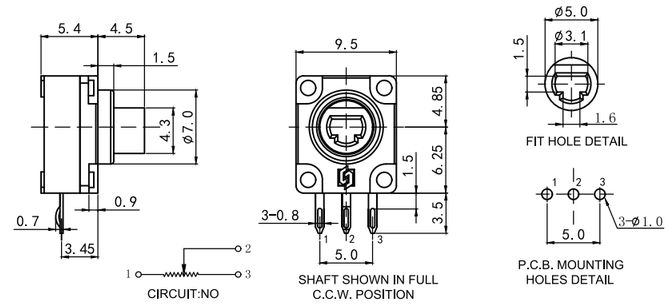
RA0909NOB0X-VA1	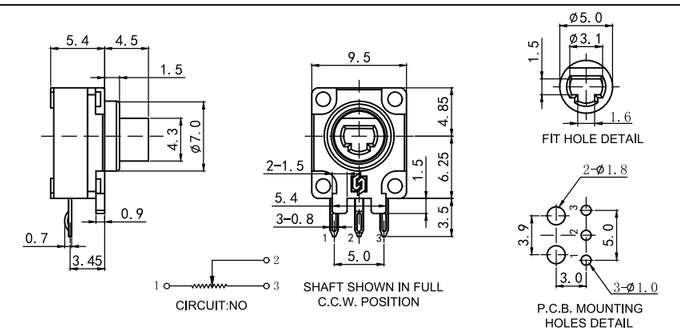
RA0909NOD0X-VA1	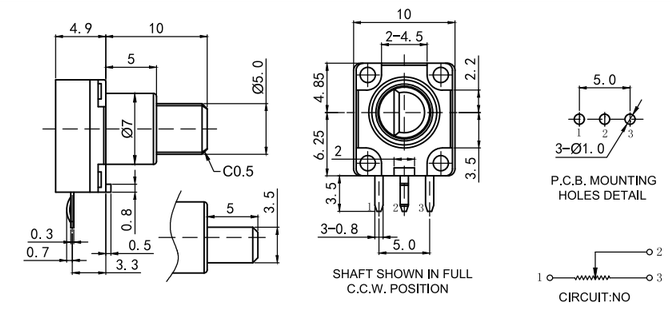
RA0918NOA0X-VA1	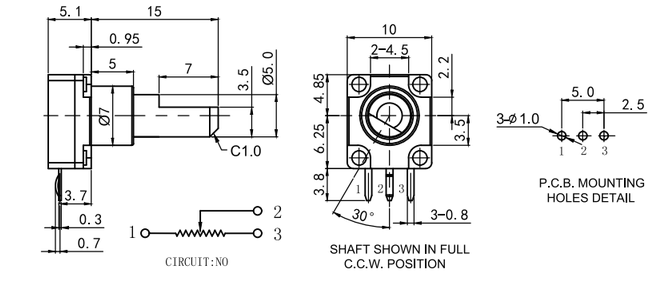

RA0917 Series
ROTARY POTENTIOMETERS

MODEL 品名 | **DIMENSIONS 尺寸** | **UNIT:mm**

RA0917ZX0X-VA1

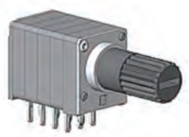

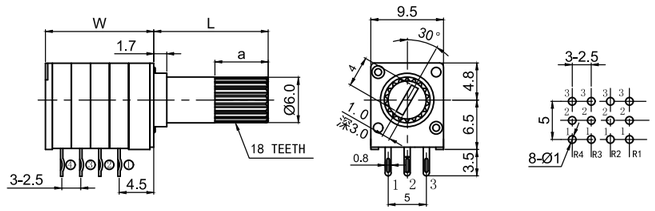

Z	W
GO	9.2
FO	14.2

L	20.0	15.0	10.0	7.0
a	7.0	7.0	7.0	4.5

RA0917ZX0A-VA1

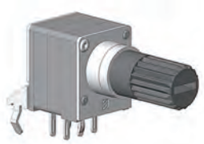

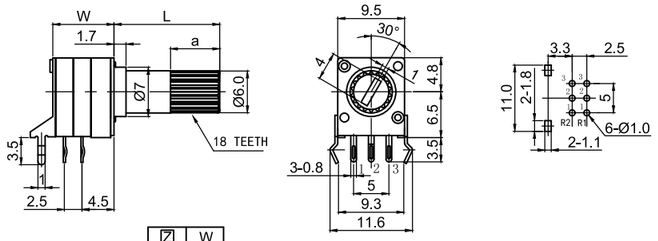

Z	W
NO	6.2
GO	8.7

L	20.0	15.0	10.0	7.0
a	7.0	7.0	7.0	4.5

RA0917GOX0C-HA1

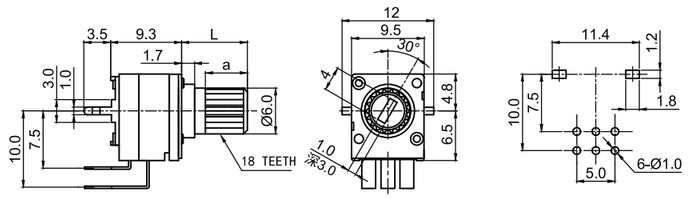

L	20.0	15.0	10.0	7.0
a	7.0	7.0	7.0	4.5

RA0917GOX0B-HA2

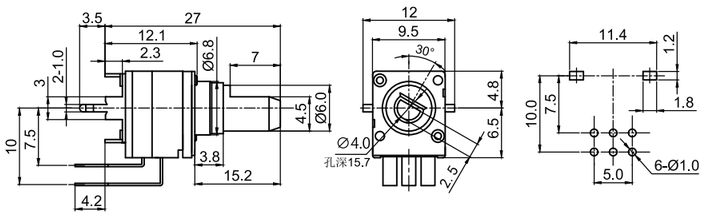

RA1150 Series
ROTARY POTENTIOMETERS

MODEL 品名 | **DIMENSIONS 尺寸** | **UNIT:mm**

RA1150NOX0Z-VAX

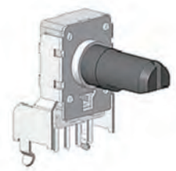

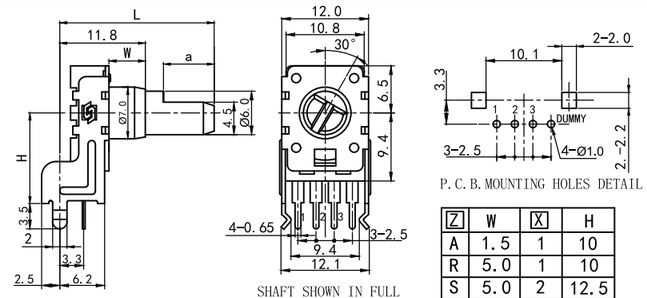

Z	W	X	H
A	1.5	1	10
R	5.0	1	10
S	5.0	2	12.5
G	1.5	2	12.5

RA1150GOX0Z-VAX

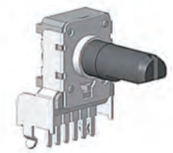

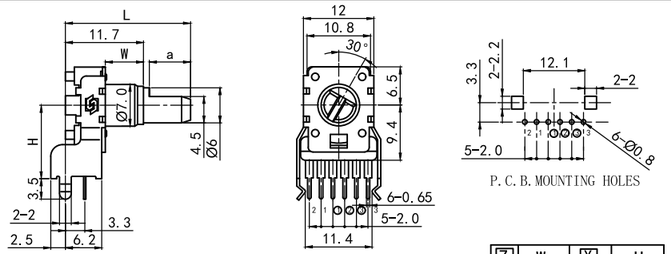

Z	W	X	H
E	1.5	1	10
J		2	12.5

RA1150GOY0Z-VAX

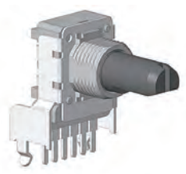

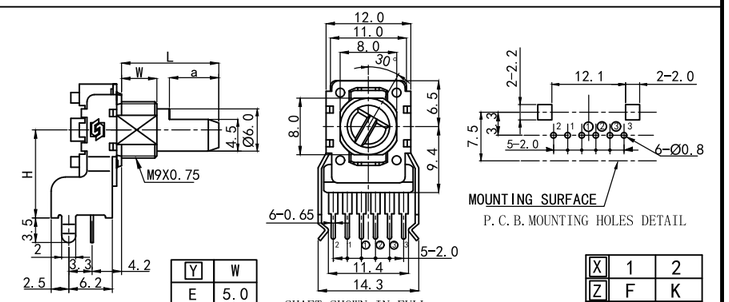

Y	W
E	5.0
F	7.0

X	1	2
Z	F	K
H	10	12.5

RA1150NOX0Z-HA1

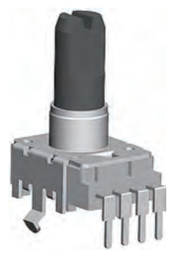

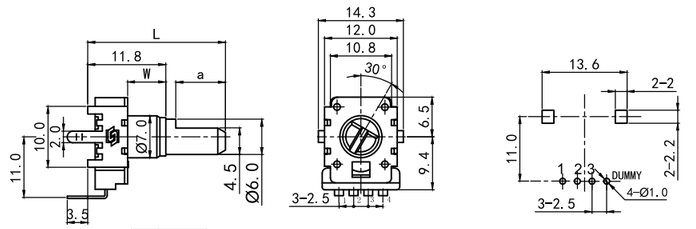

Z	W
C	1.5
Q	5.0

SHAFT SHOWN IN FULL
C.C.W. POSITION

P.C.B. MOUNTING HOLES DETAIL

RA1150 /RA1151Series
ROTARY POTENTIOMETERS

MODEL 品名 | **DIMENSIONS 尺寸** | **UNIT:mm**

RA1150GOX0Z-HA1

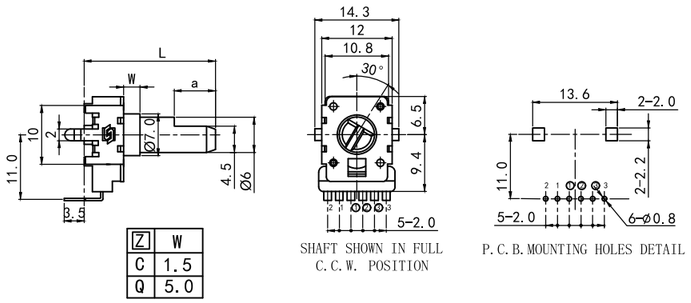

Z	W
C	1.5
Q	5.0

RA1150NOY0D-HA1

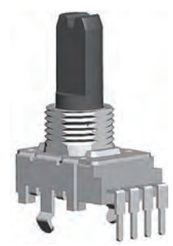

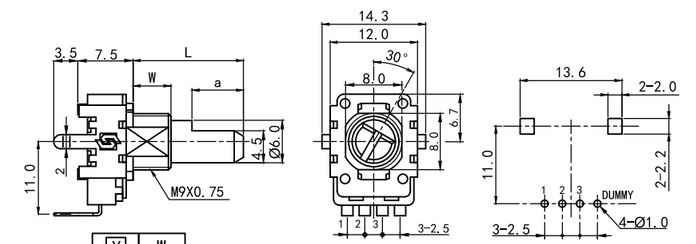

Y	W
E	5.0
F	7.0

RA1150GOY0D-HA1

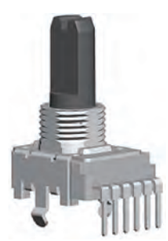

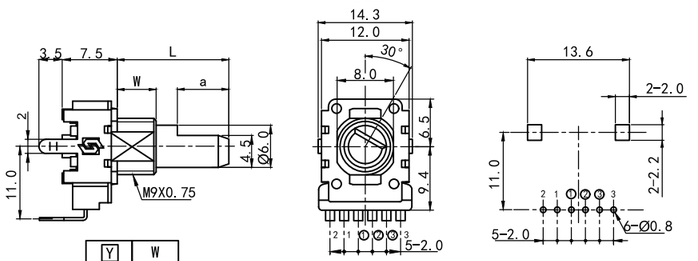

Y	W
E	5.0
F	7.0

RA1151GHE0E-HA1

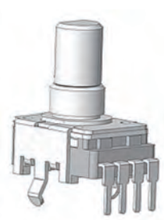

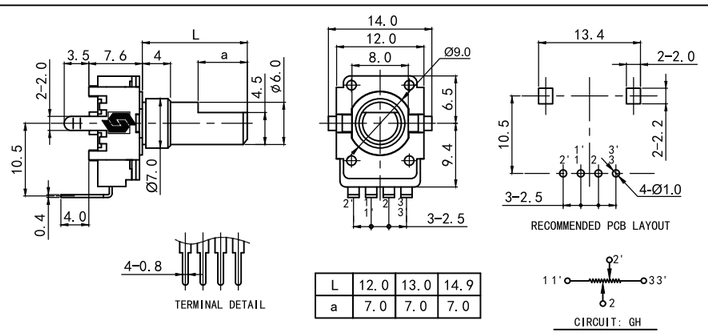

L	12.0	13.0	14.9
a	7.0	7.0	7.0

RA1151 Series
ROTARY POTENTIOMETERS

MODEL 品名 | **DIMENSIONS 尺寸** | **UNIT:mm**

RA1151GHI0E-HA1

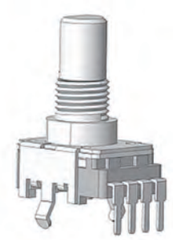

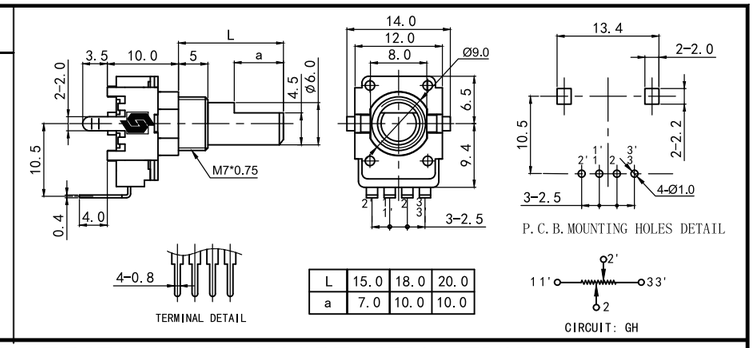

L	15.0	18.0	20.0
a	7.0	10.0	10.0

RA1151 SERIES COMMON SPECIFICATION

Total Rotational Aagle 旋转角度	360°
Rotational Torque 旋转力矩	5～60gf.cm
Operating Temperature 工作温度	-10℃～+70℃
Rating Power 额定功率	0.1W
Total Resistance & Tolerance 总阻及误差	10KΩ，±30%
Resistance Taper 电阻特性曲线	0B 见下图
Line Error 线性误差	±5%
Rotational Life 旋转寿命	20,000次 Min

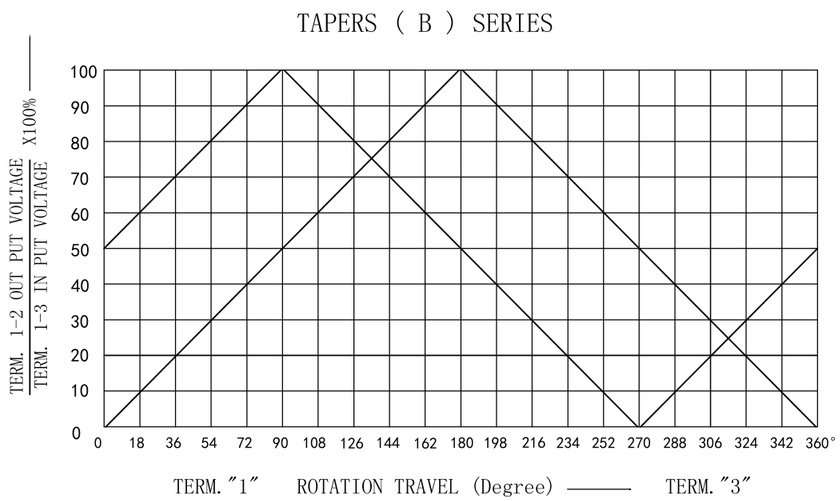

RA1450 Series
ROTARY POTENTIOMETERS

MODEL 品名 | **DIMENSIONS 尺寸** | **UNIT:mm**

RA1450GO[Y]0[Z]-VA[X]

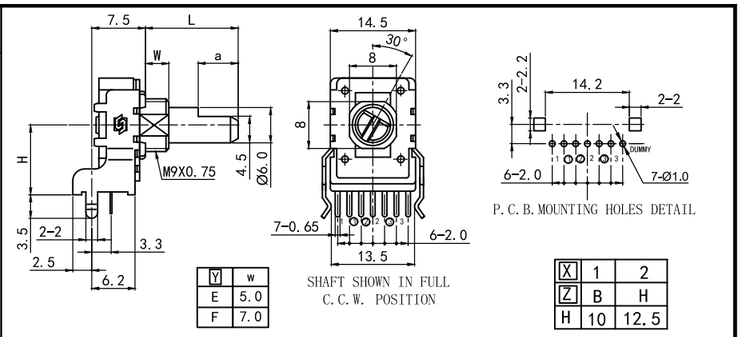

Y	w
E	5.0
F	7.0

X	1	2
Z	B	H
H	10	12.5

RA1450GOX0[Z]-VA[X]

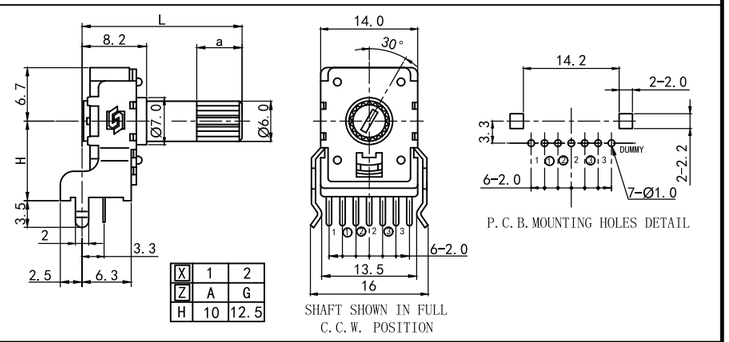

X	1	2
Z	A	G
H	10	12.5

RA1450GOX0C-HA1

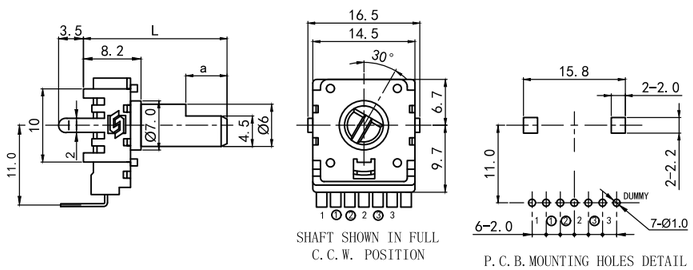

RA1450GOE0D-HA1

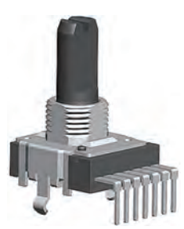

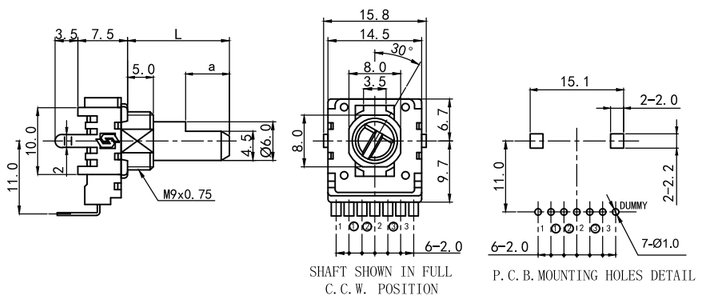

RA11/14 Series
ROTARY POTENTIOMETERS

RA1150/1450/1452 SERIES COMMON SPECIEICATION

MECHANICAL CHARACTERISTIC 机械特性				
Total Rotational Angle	旋转角度	300°±10°		
Rotational Torque	旋转力矩	20~200gf.cm (Without starting torque)		
Number of Detents	定位数目	1	11	21
		RA1150/1450	RA1150	RA1150
Click Slip Out Force	定位推动力	25~250gf.cm		
Shaft Stop Strength	轴止档强度	≥3.5Kgf.cm(RA1150);		
Push & Pull Strength	轴推拉强度	≥8Kgf		
Shaft Wobble (mm p-p)	轴摆动	Within (0.7x L/20)mm p-p Max. L=Shaft Length		
ELECTRICAL CHARACTERISTIC 电气特性				
Total Resistance Range	总阻及误差	1KΩ<R<1MΩ,±20%;1KΩ≥R or R≥1MΩ,±30%;		
Resistance Taper	电阻特性曲线	Refer to Appendix I		
Rating Power	额定功率	≤0.05W		
Max. Operating Voltage	最大工作电压	50V AC / 20V DC		
Residual Resistance	残留电阻	Refer to Appendix I		
Rotational Noise	旋转杂音	≤100 mV		
Insulation Resistance	绝缘电阻	100MΩ 1 Minute at DC 250V		
Dielectric Voltage	耐电压	1 Minute at AC 250V		
Tracking Error	同步误差	≤±3dB at -40~0dB		
ENDURANCE CHARACTERISTIC 耐久性能				
Rotational Life	旋转寿命	10,000 cycles Min		

RA1150 SERIES CIRCUIT DIAGRAM

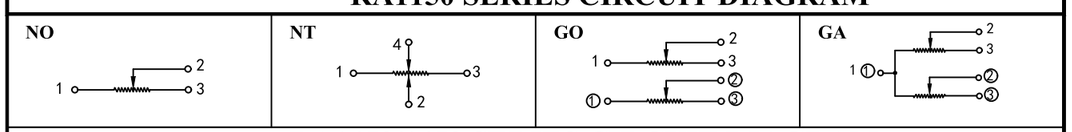

RA1450/1452 SERIES CIRCUIT DIAGRAM

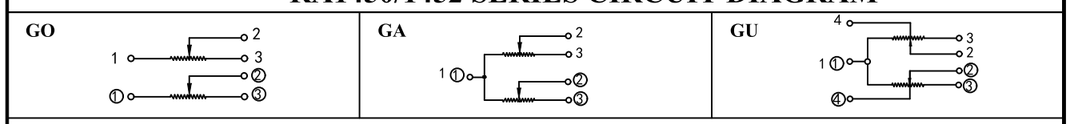

Note:In this catalog,if some parameters in the drawings are different from the "Approval sheet",it's subject to the "Approval sheet".
注明:如说明书与承认书规格参数、图面有异，均以承认书为准。

RA11/14 Series
ROTARY POTENTIOMETERS

RA1150/1450 SERIES INSULATED SHAFT TYPE

CATEGORIES	DIMENSIONS UNIT:mm

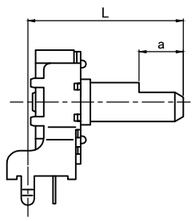

V-TYPE

FB -TYPE

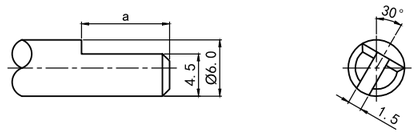

SHAFT SHOWN IN FULL
C.C.W. POSITION

L	15	20	22.5		25	27.5	30	32.5	37.5
a	4.5	7	7	12	12	12	12	12	12

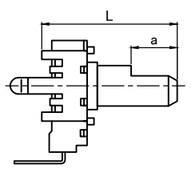

H-TYPE

KQ -TYPE

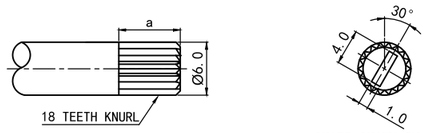

SHAFT SHOWN IN FULL
C.C.W. POSITION

L	15	20	22.5		25	27.5	30	32.5	37.5
a	4.5	7	7	12	12	12	12	12	12

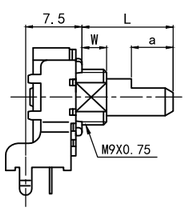

V-TYPE

FB -TYPE

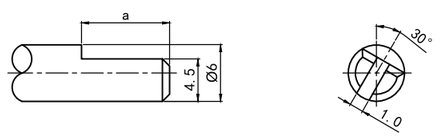

SHAFT SHOWN IN FULL
C.C.W. POSITION

L	12.5	15		17.5	20	22.5	25	30
a	7	7	10	12	12	12	12	12

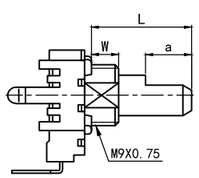

H-TYPE

KQ -TYPE

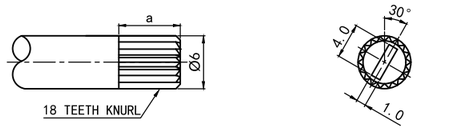

SHAFT SHOWN IN FULL
C.C.W. POSITION

L	12.5	15		17.5	20	22.5	25	30
a	7	7	10	12	12	12	12	12

RA26 Series
ROTARY POTENTIOMETERS

MODEL 品名 **DIMENSIONS 尺寸** **UNIT:mm**

RA2601NOA0X-HA1

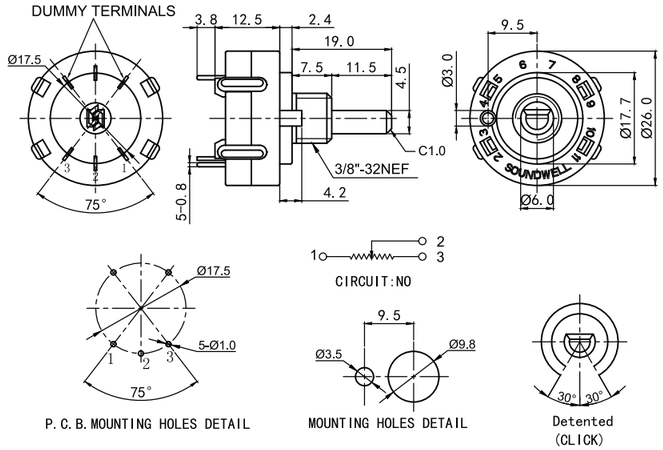

RA26 SERIES COMMON SPECIFICATION

MECHANICAL CHARACTERISTIC 机械特性		
Total Rotational Angle	旋转角度	360°
Rotational Torque	旋转力矩	20~200gf.cm (Without starting torque)
Click Position	定位位置	Refer to drawing
Number of Detents	定位数目	2
Click Slip Out Force	定位推动力	200~600gf.cm
Push & Pull Strength	轴推拉强度	≥8Kgf
Shaft Wobble (mm p-p)	轴摆动	Within (0.7x L/20)mm p-p Max. L=Shaft Length
ELECTRICAL CHARACTERISTIC 电气特性		
Total Resistance Range	总阻及误差	1KΩ<R<1MΩ,±20%;1KΩ≥R or R≥1MΩ,±30%;
Resistance Taper	电阻特性曲线	Refer to Appendix I
Rating Power	额定功率	≤0.2 W
Max. Operating Voltage	最大工作电压	150V AC
Residual Resistance	残留电阻	Refer to Appendix I
Rotational Noise	旋转杂音	≤100 mV
Insulation Resistance	绝缘电阻	100MΩ 1 Minuteat at DC 250V
Dielectric Voltage	耐电压	1 Minute at AC 250V
ENDURANCE CHARACTERISTIC 耐久性能		
Rotational Life	旋转寿命	50,000 cycles Min

RB1201 Series
ROTARY POTENTIOMETER

MODEL 品名 | **DIMENSIONS 尺寸** | **UNIT:mm**

RB1201NOX0A-VB1

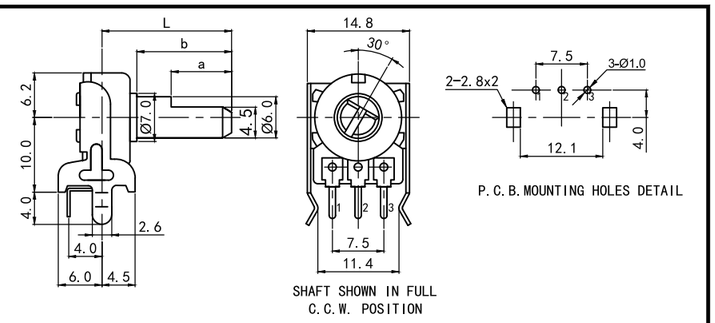

RB1201GOX0B-VB2

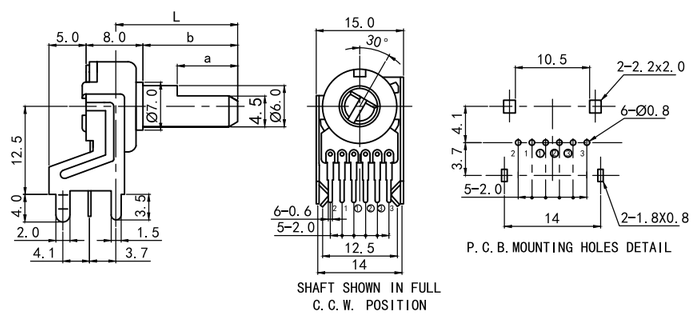

RB1201⒵X0D-HA1

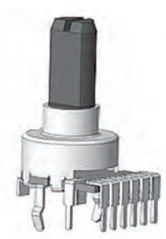

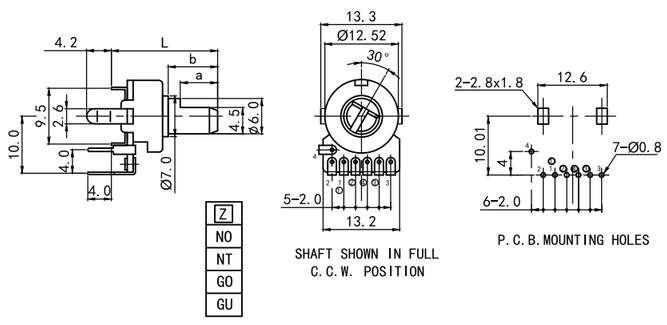

Z
NO
NT
GO
GU

RB1201 SERIES CIRCUIT DIAGRAM

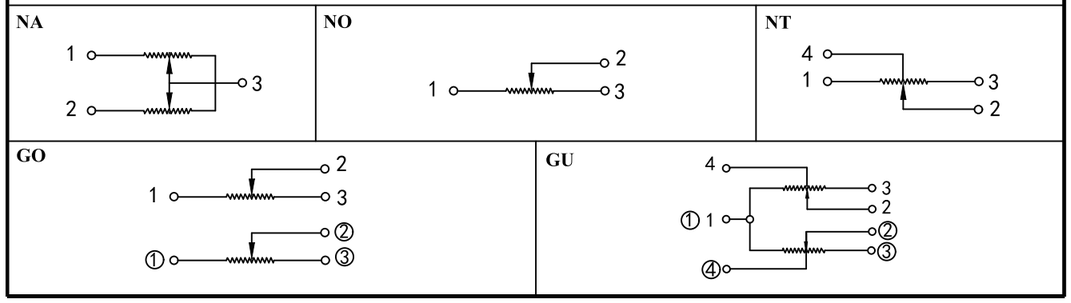

ROTARY POTENTIOMETER
RB1201 & RB1211 Series

RB1201 SERIES INSULATED SHAFT TYPE

CATEGORIES | **DIMENSIONS** UNIT:mm

V-TYPE (VERTICAL)

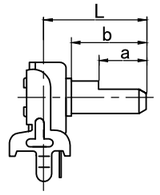

FA-TYPE

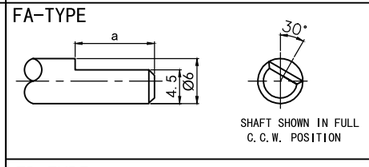

L	H	15	20	25	30	35	
	V	10	15	20	25	30	
b		5	10	15	20	25	
a		5	7 8	7 12	7 12	12	

FB-TYPE

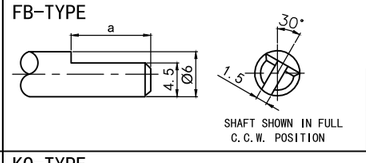

L	H	15	24	20	25	29	30	35
	V	10	19	15	20	24	25	30
b		5	14	10	15	19	20	25
a		5	10	7 8	7 12	10	7 12	12

H-TYPE (HORIZONTAL)

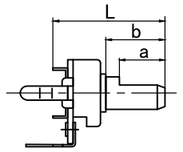

KQ-TYPE

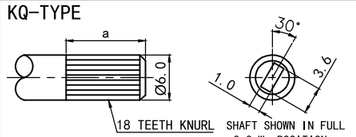

L	H	15	20	25	30	35	
	V	10	15	20	25	30	
b		5	10	15	20	25	
a		5	7 8 10	7 12	7 12	12	

KS-TYPE

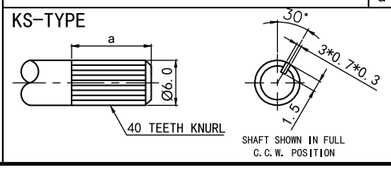

L	H	15	20	25	30	35	
	V	10	15	20	25	30	
b		5	10	15	20	25	
a		5	7 8	7 12	7 12	12	

RB1201 SERIES COMMON SPECIFICATION

MECHANICAL CHARACTERISTIC 机械特性		
Total Rotational Angle	旋转角度	300°±10°
Rotational Torque	旋转力矩	10~200gf.cm
Click Slip Out Force	定位推动力	25~250gf.cm
Shaft Stop Strength	轴止档强度	≥2.5Kgf.cm
Push & Pull Strength	轴推拉强度	≥5Kgf
ELECTRICAL CHARACTERISTIC 电气特性		
Total Resistance Range	总阻及误差	1KΩ<R<1MΩ,±20%;1KΩ≥R or R≥1MΩ,±30%;
Resistance Taper	电阻特性曲线	Refer to Appendix I
Rating Power	额定功率	≤0.05W
Max. Operating Voltage	最大工作电压	AC 50V / DC 20V
Residual Resistance	残留电阻	Refer to Appendix I
Rotational Noise	旋转杂音	≤100mV
Tracking Error	同步误差	≤±4dB at -40~0dB
ENDURANCE CHARACTERISTIC 耐久特性		
Rotational Life	旋转寿命	10,000 cycles Min

RB1601 Series
ROTARY POTENTIOMETERS

MODEL 品名	DIMENSIONS 尺寸	UNIT:mm

RB1601 Z E0A-VA1

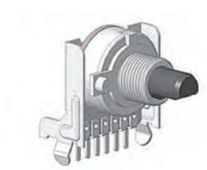

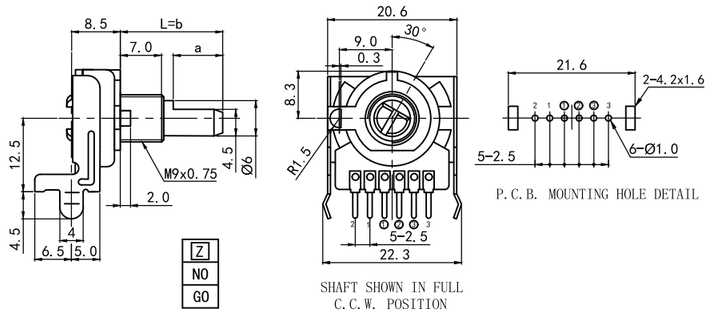

RB1601NOX0D-VA1

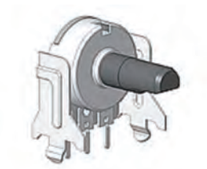

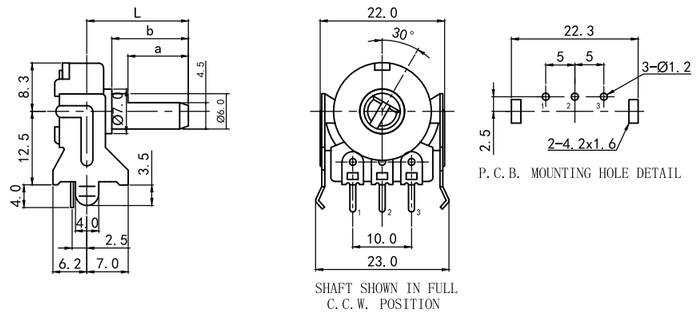

RB1601 Z X0B-HA1

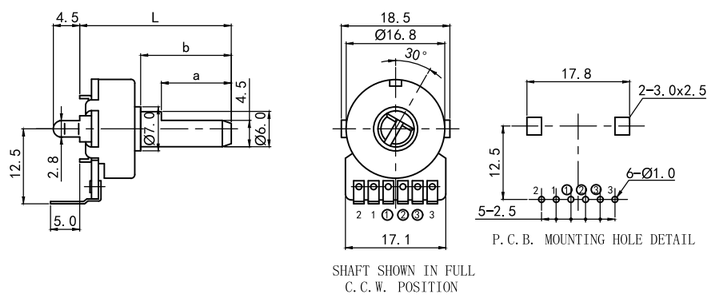

RB1601 Z E0A-VA1

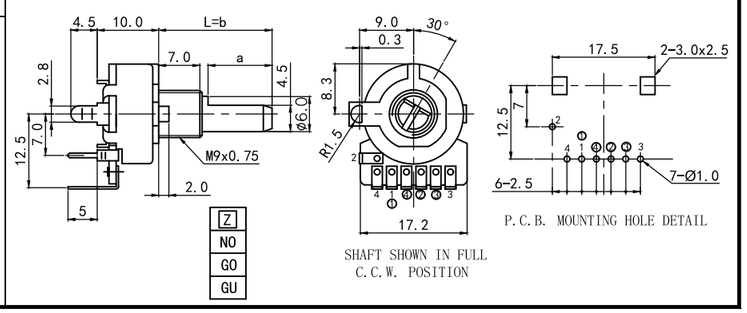

RB1601 Series
ROTARY POTENTIOMETERS

RB1601 SERIES COMMON SPECIFICATION		
MECHANICAL CHARACTERISTIC 机械特性		
Total Rotational Angle	旋转角度	300°±10°
Rotational Torque	旋转力矩	30~200gf.cm
Click Position	定位位置	Center click only
Click Slip Out Force	定位推动力	50~250gf.cm
Shaft Stop Strength	轴止档强度	≥6Kgf.cm
Push & Pull Strength	轴推拉强度	≥5Kgf
Shaft Wobble (mm p-p)	轴摆动	Within (0.7x L/20)mm p-p L=Shaft Length
ELECTRICAL CHARACTERISTIC 电气性能		
Total Resistance Range	总阻及误差	1KΩ<R<1MΩ,±20%; 1KΩ≥R or R≥1MΩ,±30%;
Resistance Taper	电阻特性曲线	Refer to Appendix I
Rating Power	额定功率	Single: 0.2W Other: 0.1W
Max. Operating Voltage	最大工作电压	50V AC / 20V DC
Residual Resistance	残留电阻	Refer to Appendix I
Rotational Noise	旋转杂音	≤100mV
Insulation Resistance	绝缘电阻	100MΩ 1 Minuteat at DC 250V
Dielectric Voltage	耐电压	1 Minute at AC 250V
Tracking Error	同步误差	≤±4dB at -40~0dB
ENDURANCE CHARACTERISTIC 耐久特能		
Rotational Life	旋转寿命	10,000 cycles Min

RB1601 SERIES CIRCUIT DIAGRAM

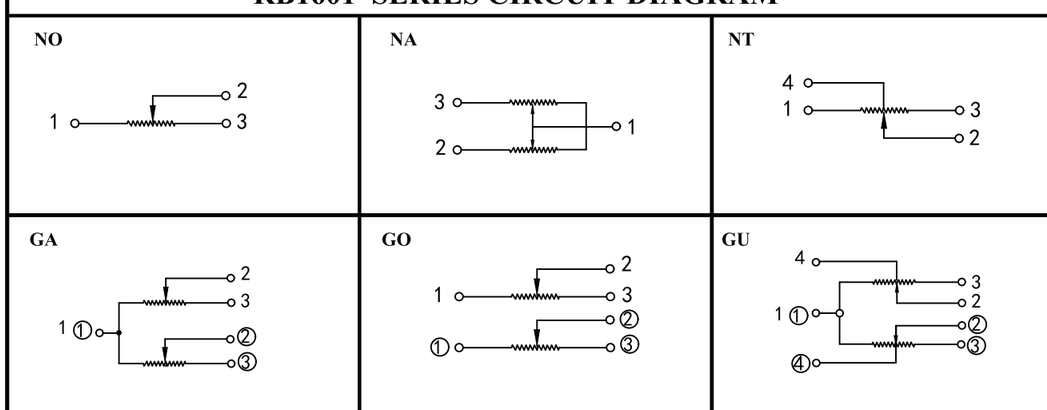

Note:In this catalog,if some parame ters lr drawings are different from the "Approval sheet",it's subject to the "Approval sheet".
注明:如说明书与承认书规格参数、图面有异，均以承认书为准。

RB1601 Series
ROTARY POTENTIOMETERS

RB1601 SERIES INSULATED SHAFT TYPE

UNIT:mm

V-TYPE (VERTICAL)

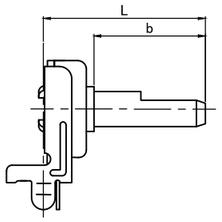

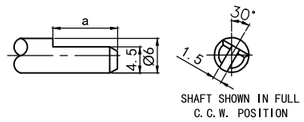

FB-TYPE

L	18.5	22.5	23.5		28.5	33.5	38.5
b	10	14	15		20	25	30
a	7	10	7	12	12	12	12

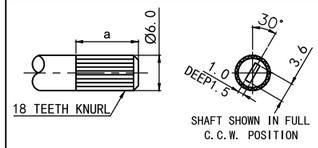

KQ-TYPE

L	18.5		23.5		28.5	33.5	38.5
b	10		15		20	25	30
a	7	8	7	12	12	12	12

V-TYPE (VERTICAL)

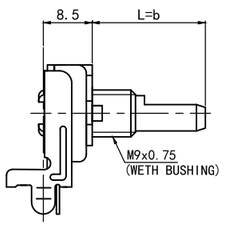

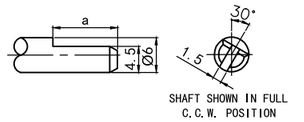

FB-TYPE

L=b	10	14	15		20	25	30
a	7	10	7	12	12	12	12

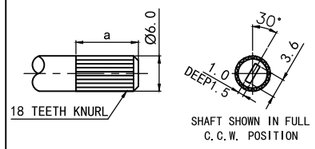

KQ-TYPE

L=b	10		15		20	25	30
a	7	8	7	12	12	12	12

H-TYPE (HORIZONTAL)

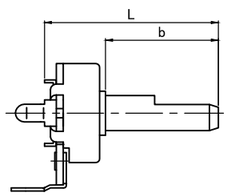

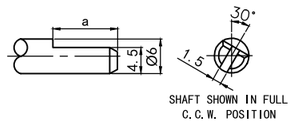

FB-TYPE

L	20	24	25		30	35	40
b	10	14	15		20	25	30
a	7	10	7	12	12	12	12

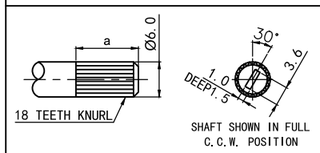

KQ-TYPE

L	20		25		30	35	40
b	10		15		20	25	30
a	7	8	7	12	12	12	12

H-TYPE (HORIZONTAL)

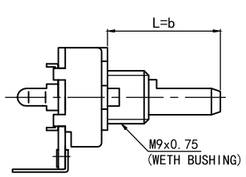

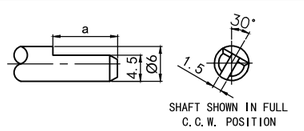

FB-TYPE

L=b	10	14	15		20	25	30
a	7	10	7	12	12	12	12

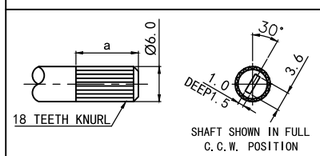

KQ-TYPE

L=b	10		15		20	25	30
a	7	8	7	12	12	12	12

Note:In this catalog,if some parame ters lr drawings are different from the "Approval sheet",it's subject to the "Approval sheet".
注明:如说明书与承认书规格参数、图面有异，均以承认书为准。

RD2410/11 Series
ROTARY POTENTIOMETERS

MODEL 品名	DIMENSIONS 尺寸	UNIT:mm

RD2410NO[Z]0X-VA1

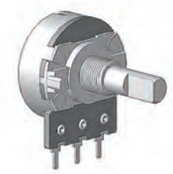

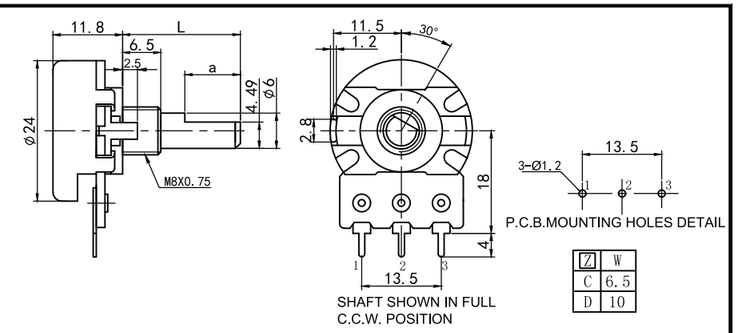

Z	W
C	6.5
D	10

RD2410SN[Z]0X-WA2

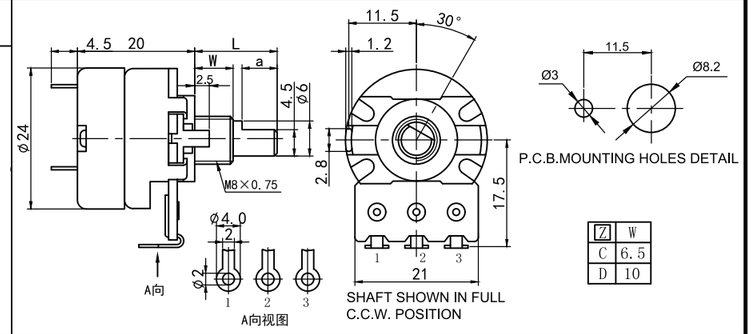

Z	W
C	6.5
D	10

RD2411NO[Z]0X-WA2

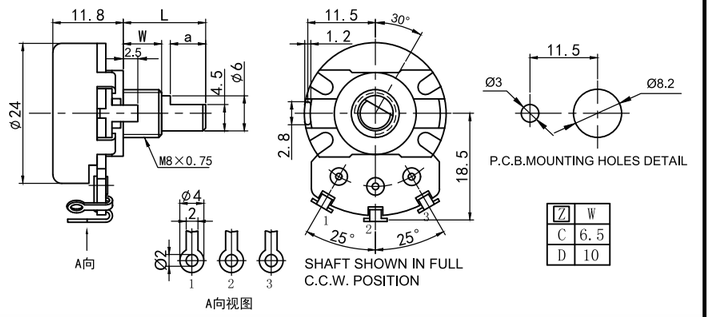

Z	W
C	6.5
D	10

RD2411SN[Z]0X-HA4

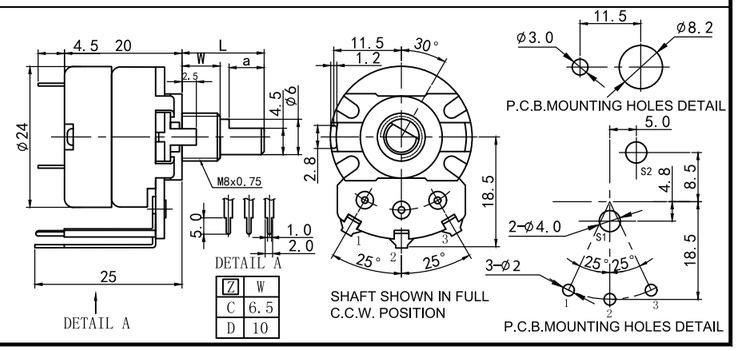

Z	W
C	6.5
D	10

RD24 Series
ROTARY POTENTIOMETERS

RD2410/2411 SERIES COMMON SPECIFICATION			
MECHANICAL CHARACTERISTIC 机械特性			
Total Rotational Angle	旋转角度	300°±10°	
Rotational Torque	旋转力矩	20~200gf.cm(Without staring torque)	
Detent Position	定位位置	Center click only	
Detent Slip Out Force	定位推动力	100~450gf.cm	
Shaft Stop Strength	轴止档强度	≥6Kgf.cm	
Shaft Wobble (mm p-p)	轴摆动	Within (0.7xL/30)mm p-p Max. L=Shaft Length	
Switch Working Angle	开关工作角度	50°±10°	
Switch Working Torque	开关动作力	300~800gf.cm	
ELECTRICAL CHARACTERISTIC 电气特性			
Total Resistance Range	总阻及误差	1KΩ<R<1MΩ,±20%;1KΩ≥R or R≥1MΩ,±30%	
Resistance Taper	电阻特性曲线	Refer to Appendix I	
Rating Power	额定功率	Linear taper 0.5W; Other taper 0.25W	
Max. Operating Voltage	最大工作电压	AC 150V	
Residual Resistance	残留电阻	Refer to Appendix I	
Rotational Noise	旋转杂音	≤ 100 mV	
Insulation Resistance	绝缘电阻	100MΩ 1 Minute at DC 500V	
Dielectric Voltage	耐电压	1 Minute at AC 500V	
Switch Power Rating	开关承受负载	AC 125V 1A	DC 220V 3A
Switch Contact Resistance	开关残留电阻	≤0.5Ω	
ENDURANCE CHARACTERISTIC 耐久特性			
Rotational Life	旋转寿命	10,000 cycles Min	

RD2410/2411 SERIES CIRCUIT DIAGRAM

NO

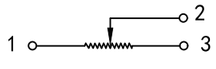

SN

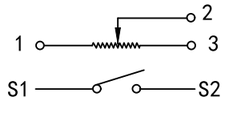

Note:In this catalog,if some parameters in the drawings are different from the "Approval sheet",it's subject to the "Approval sheet".
注明:如说明书与承认书规格参数、图面有异，均以承认书为准。

RD1201 Series
ROTARY POTENTIOMETERS

MODEL 品名 **DIMENSIONS 尺寸** **UNIT:mm**

RD1201NO[X]0A-VB1

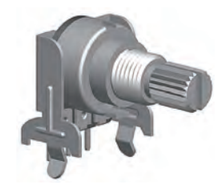

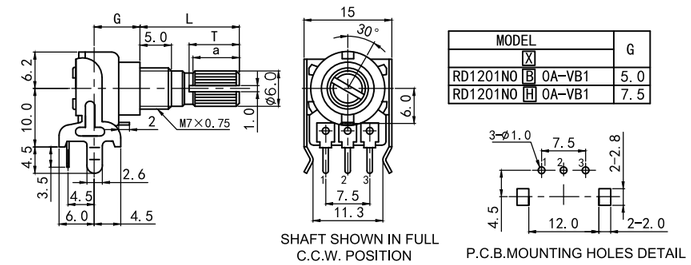

MODEL X	G
RD1201NO B 0A-VB1	5.0
RD1201NO H 0A-VB1	7.5

RD1201NO[X]0D-HA1

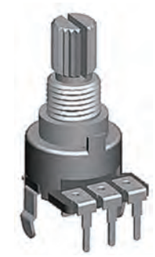

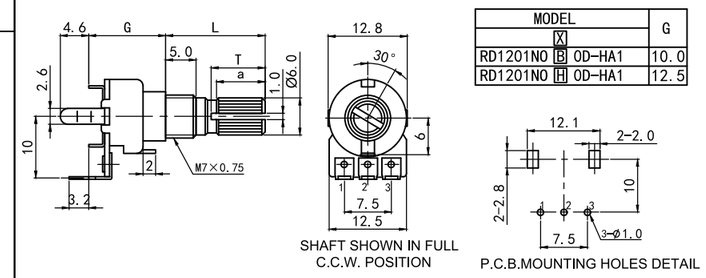

MODEL X	G
RD1201NO B 0D-HA1	10.0
RD1201NO H 0D-HA1	12.5

RD1201GO[X]0A-VA1

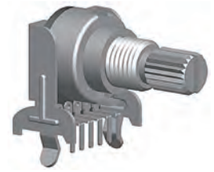

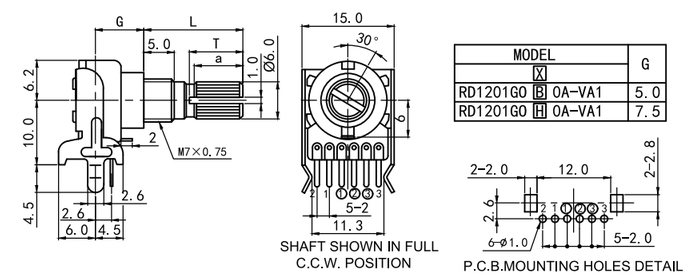

MODEL X	G
RD1201GO B 0A-VA1	5.0
RD1201GO H 0A-VA1	7.5

RD1201GO[X]0D-HA1

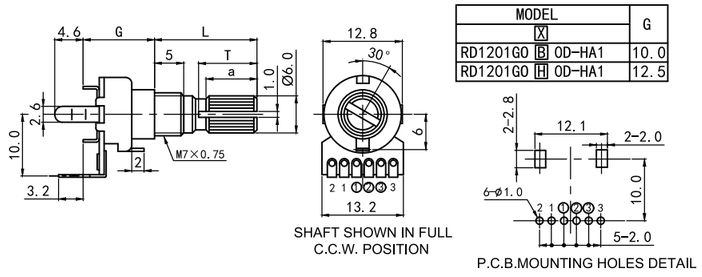

MODEL X	G
RD1201GO B 0D-HA1	10.0
RD1201GO H 0D-HA1	12.5

RD1280/1281 Series
ROTARY POTENTIOMETERS

MODEL 品名 **DIMENSIONS 尺寸** **UNIT:mm**

RD1280NO[Z]0X-VA[X]

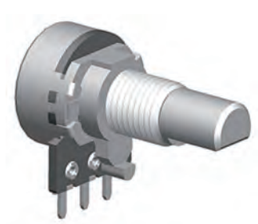

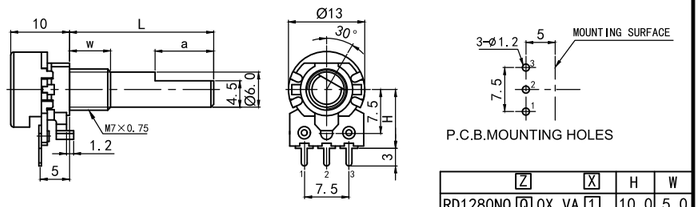

[Z]	[X]	H	W
RD1280NO [Q] 0X VA [1]		10.0	5.0
RD1280NO [Q] 0X VA [2]		12.5	5.0
RD1280NO [S] 0X VA [1]		10.0	7.0
RD1280NO [S] 0X VA [2]		12.5	7.0

RD1280GO[Z]0X-VA[X]

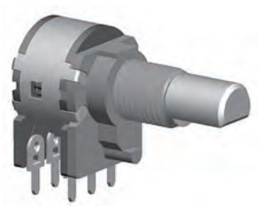

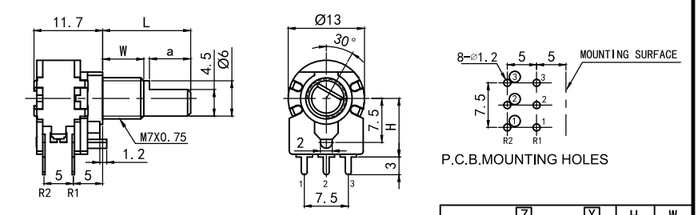

[Z]	[X]	H	W
RD1280NO [Q] 0X VA [1]		10.0	5.0
RD1280NO [Q] 0X VA [2]		12.5	5.0
RD1280NO [S] 0X VA [1]		10.0	7.0
RD1280NO [S] 0X VA [2]		12.5	7.0

RD1281SGJ0X-VA[X]

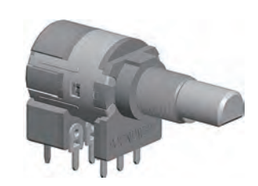

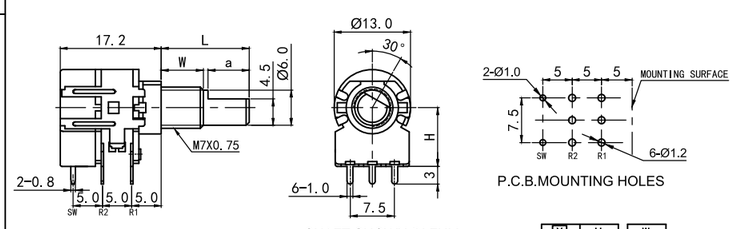

[X]	H	W
VA1	10.0	5
VA2	12.5	7

RD1281SNA0X-VA2

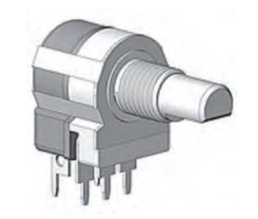

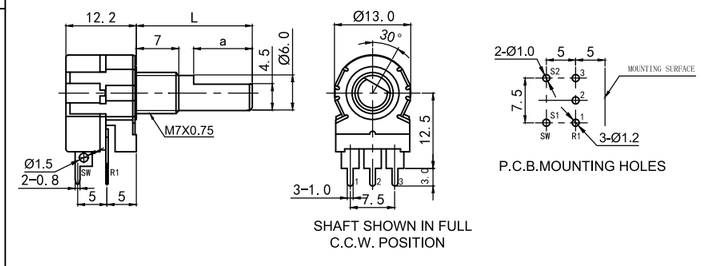

RD12 Series
ROTARY POTENTIOMETERS

RD12 SERIES COMMON SPECIFICATION

MECHANICAL CHARACTERISTIC 机械特性		
Total Rotational Angle	旋转角度	300°±10°
Rotational Torque	旋转力矩	10~200gf.cm
Detent Position	定位位置	Center click only
Detent Slip Out Force	定位推动力	50~300gf.cm
Shaft Stop Strength	轴止档强度	≥3Kgf.cm
Shaft Wobble (mm p-p)	轴摆动	Within (0.7xL/20)mm p-p Max. L=Shaft Length
Switch Working Angle	开关工作角度	30°±10°
Switch Working Torque	开关工作动力	50~400gf.cm
ELECTRICAL CHARACTERISTIC 电气特性		
Total Resistance Range	总阻及误差	1KΩ<R<1MΩ,±20%; R≤1KΩ or R≥1MΩ,±30%;
Resistance Taper	电阻特性曲线	Refer to Appendix I
Rating Power	额定功率	Linear taper 0.08W; Other taper 0.05W
Max. Operating Voltage	最大工作电压	AC 50V / DC 20V
Residual Resistance	残留电阻	Refer to Appendix I
Rotational Noise	旋转杂音	≤100 mV
Insulation Resistance	绝缘电阻	50MΩ 1Minuteat at DC 250V
Dielectric Voltage	耐电压	1 Minute at AC 250V
Tracking Error	同步误差	≤±3dB at -40~0dB
Switch Power Rating	开关承受负载	12V DC 1A max
Switch Contact Resistance	开关接触阻抗	≤0.5Ω
ENDURANCE CHARACTERISTIC 耐久性能		
Rotational Life	旋转寿命	10,000 cycles Min

RD12 SERIES CIRCUIT DIAGRAM

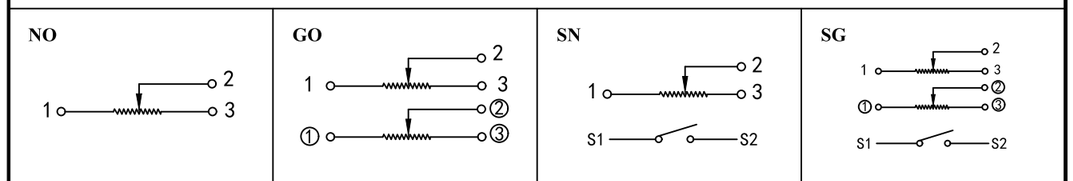

Note:In this catalog,if some parameters in the drawings are different from the "Approval sheet",it's subject to the "Approval sheet".
注明:如说明书与承认书规格参数、图面有异，均以承认书为准。

RD1610 Series
ROTARY POTENTIOMETERS

MODEL 品名 | **DIMENSIONS 尺寸** | **UNIT:mm**

RD1610NOA0X-VA[X]

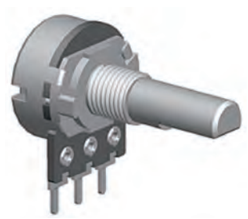

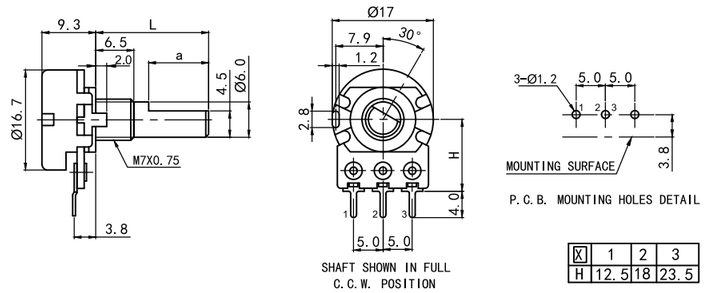

X	1	2	3
H	12.5	18	23.5

RD1610NOA0X-PA1

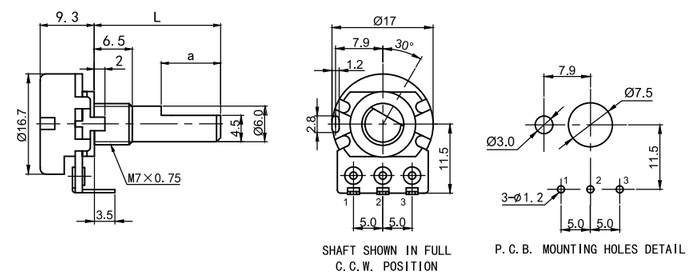

RD1610NOT0P-VA1

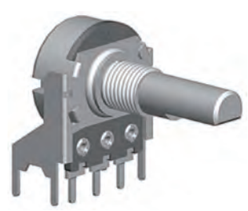

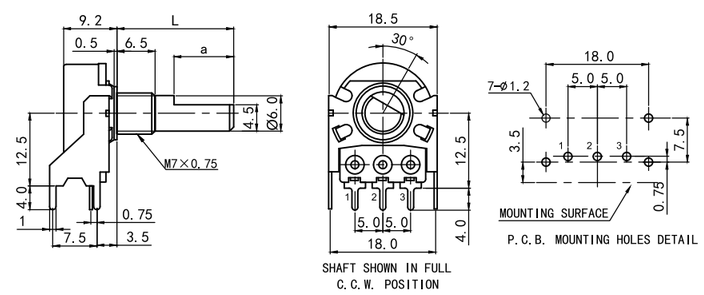

RD1610SNA0X-VA[X]

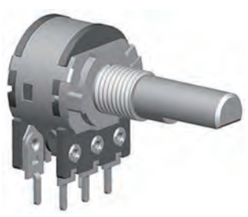

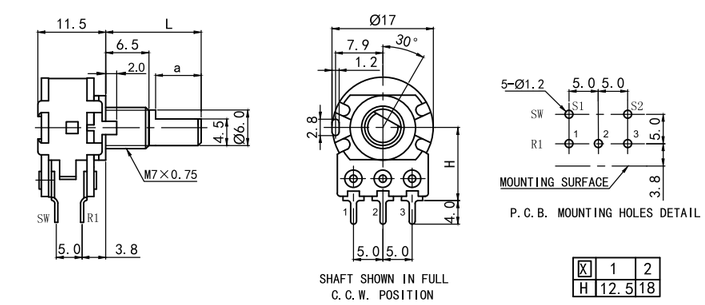

X	1	2
H	12.5	18

RD1610 Series
ROTARY POTENTIOMETERS

MODEL 品名 | **DIMENSIONS 尺寸** | **UNIT:mm**

RD1610GOA0X-WA2

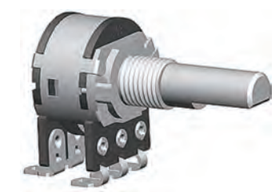

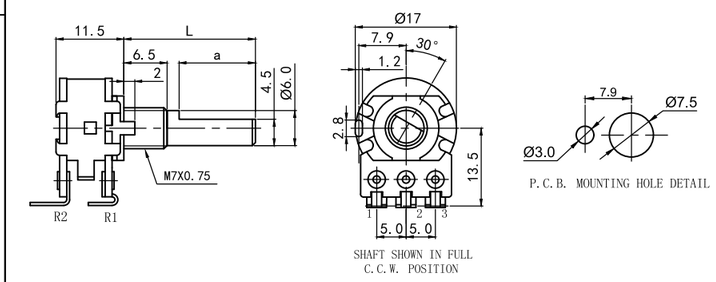

RD1610GOA0X-VA[X]

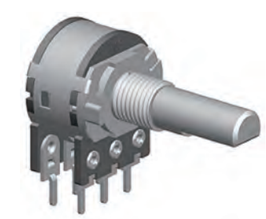

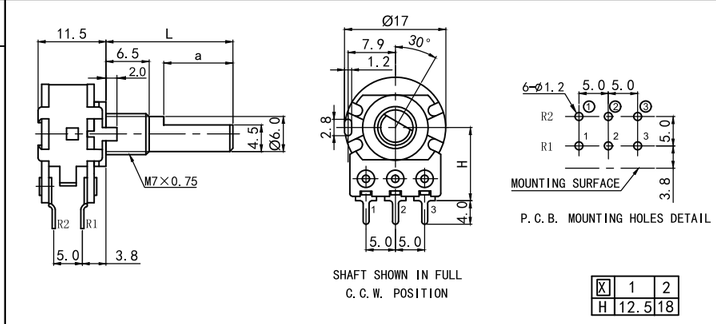

X	1	2
H	12.5	18

RD1610GOA0G-HA1

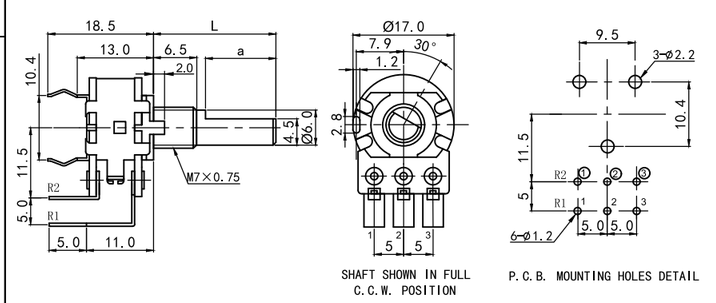

RD1610GOA0X-PA1

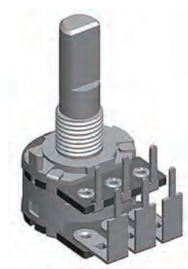

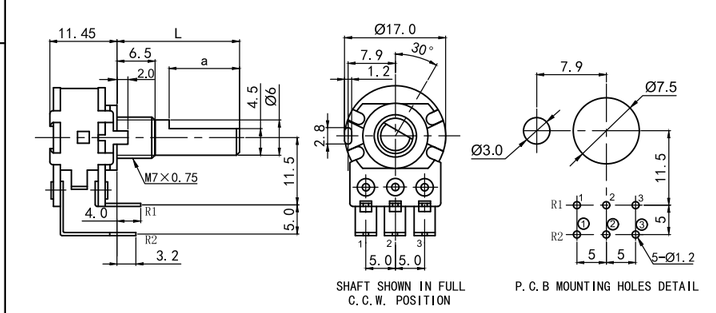

RD1610Series
ROTARY POTENTIOMETERS

RD1610 SERIES COMMON SPECIFICATION		
MECHANICAL CHARACTERISTIC 机械特性		
Total Rotational Angle	旋转角度	300°±10°
Rotational Torque	旋转力矩	20~200gf.cm(Without starting torque)
Click Position	定位位置	Center click or 1、11、21、41 position clicks
Click Slip Out Force	定位推动力	50~300gf.cm
Shaft Stop Strength	轴止档强度	≥ 6Kgf.cm
Shaft Wobble (mm p-p)	轴摆动	Within (0.7xL/30)mm p-p Max. L=Shaft Length
Switch Working Angle	开关工作角度	50°±10°
Switch Working Torque	开关动作力	40~450gf.cm
ELECTRICAL CHARACTERISTIC 电气特性		
Total Resistance Range	总阻及误差	1KΩ<R<1MΩ,±20%；1KΩ≥R or R≥1MΩ,±30%;
Resistance Taper	电阻特性曲线	Refer to Appendix I
Rating Power	额定功率	Linear taper 0.2W; Other taper 0.1W
Max. Operating Voltage	最大工作电压	AC 150V
Residual Resistance	残留电阻	Refer to Appendix I
Rotational Noise	旋转杂音	≤100 mV
Insulation Resistance	绝缘电阻	100MΩ 1 Minute at DC 500V
Dielectric Voltage	耐电压	1 Minute at AC 500V
Tracking Error	同步误差	≤±3dB at -40~0dB
Switch Power Rating	开关承受负载	DC 12V,1A max
Switch Contact Resistance	开关残留电阻	≤0.5Ω
ENDURANCE CHARACTERISTIC 耐久性能		
Rotational Life	旋转寿命	10,000 cycles Min

RD16 SERIES CIRCUIT DIAGRAM

NO

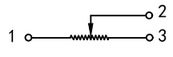

NT

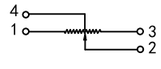

SN

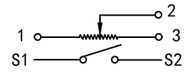

GO

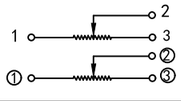

GT

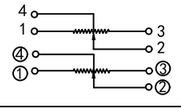

Note:In this catalog,if some parameters in the drawings are different from the "Approval sheet",it's subject to the "Approval sheet".
注明:如说明书与承认书规格参数、图面有异，均以承认书为准。

RM1611 Series
ROTARY POTENTIOMETERS

MODEL 品名	DIMENSIONS 尺寸 UNIT:mm

RM1611Ⓩ A0X-VA1

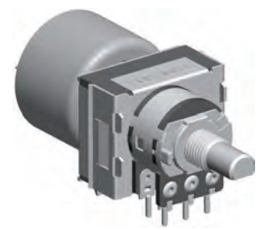

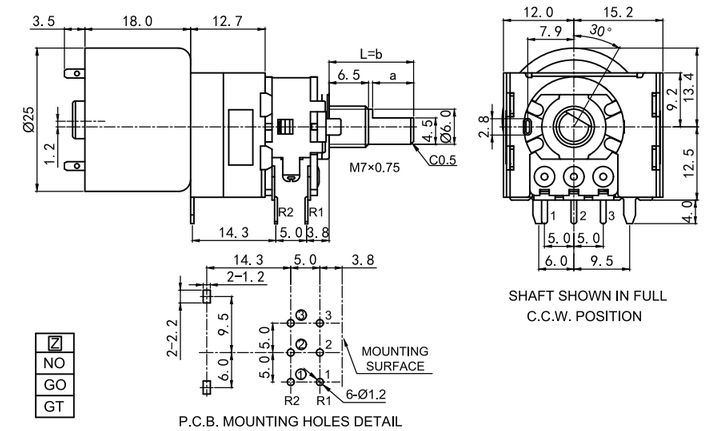

Ⓩ
NO
GO
GT

RM1613Ⓩ E0X-VA1

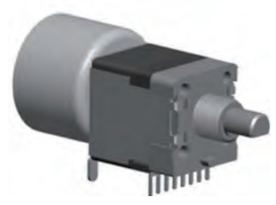

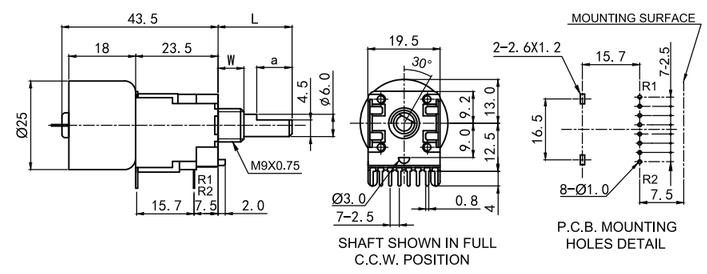

Ⓩ	代码
NO	13
GO	23
GT	33

XX :CIRCUIT

RM16XX MOUNTING HOLE AND CIRCUIT DIAGRAM

RM16XXGO

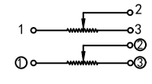

Z	code:0		2	1	①	②	③	3	

RM16XXGA

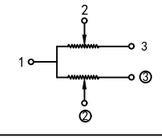

				COM					
Z	code:0		2	1	①	②	③	3	
	code:1		2	1/n	②		③	3	

RM16XXGT

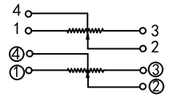

Z	code:0	4	2	1	①	②	③	3	④

RM16XXGU

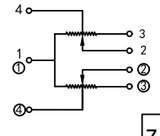

					COM					
Z	code:0	4	2	1	①	②	③	3	④
	code:1		2	1/n	②	④	③	3	4

RM16 Series
ROTARY POTENTIOMETERS

RM16 SERIES COMMON SPECIFICATION	
MECHANICAL CHARACTERISTIC 机械特性	
Total Rotational Angle 旋转角度	300°±10°
Rotational Torque 旋转力矩	120~450gf.cm(Without staring torque)
Shaft Stop Strength 轴止档强度	≥6Kgf.cm
Push & Pull Strength 轴推拉强度	≥6Kgf
Shaft Wobble (mm p-p) 轴摆动	Within (0.7xL/30)mm p-p Max. L=Shaft Length
ELECTRICAL CHARACTERISTIC 电气特性	
Total Resistance Range 总阻及误差	1KΩ<R<1MΩ,±20%;1KΩ≥R or R≥1MΩ,±30%;
Resistance Taper 电阻特性曲线	Refer to Appendix I
Rating Power 额定功率	Linear taper 0.2W; Other taper 0.1W
Max. Operating Voltage 最大工作电压	Linear taper 200V; Other taper 150V
Residual Resistance 残留电阻	Refer to Appendix I
Rotational Noise 旋转杂音	≤100 mV
Insulation Resistance 绝缘电阻	100MΩ 1 Minute at DC 500V
Dielectric Voltage 耐电压	1 Minute at AC 500V
Tracking Error 同步误差	≤±3dB at -40~0dB
Motor Voltage 马达工作电压	DC 4~6V (4.5V Standard)
Rotational Speed (Sec/300°) 转速	11±3 Sec/300° (DC 4.5 V)
Max.Operating Current (mA) 最大工作电流	100mA (At rotation);150mA (At end slip) DC 4.5V
ENDURANCE CHARACTERISTIC 耐久特性	
Rotational Life 旋转寿命	10,0000 cycles Min

RM1611 SERIES CIRCUIT DIAGRAM

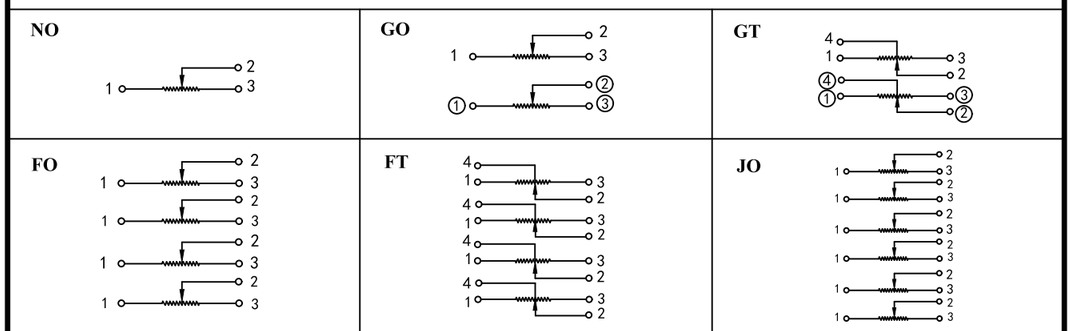

Note:In this catalog,if some parame ters lr drawings are different from the "Approval sheet",it's subject to the "Approval sheet".
注明:如说明书与承认书规格参数、图面有异，均以承认书为准。

RA08 Series
ROTARY POTENTIOMETERS

MODEL 品名 **DIMENSIONS 尺寸** **UNIT:mm**

RA0801NO Z 0X-VA1

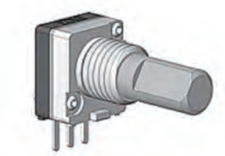

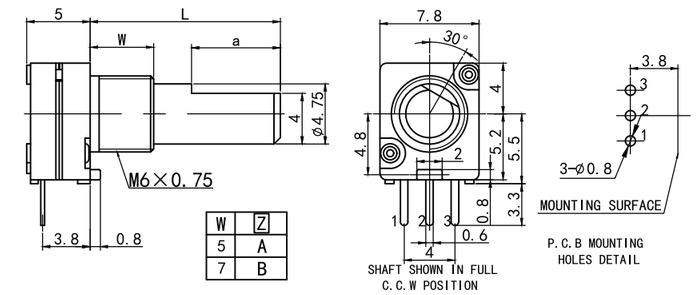

RA0801GO Z 0X-VA1

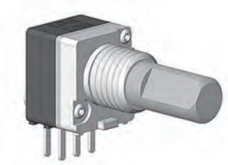

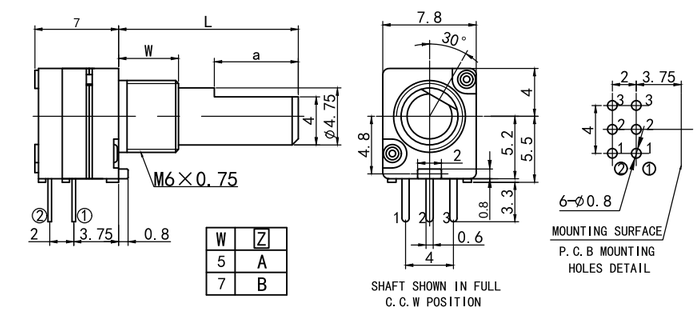

RA0801EO Z 0X-VA1

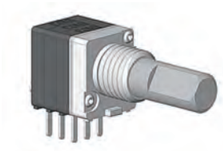

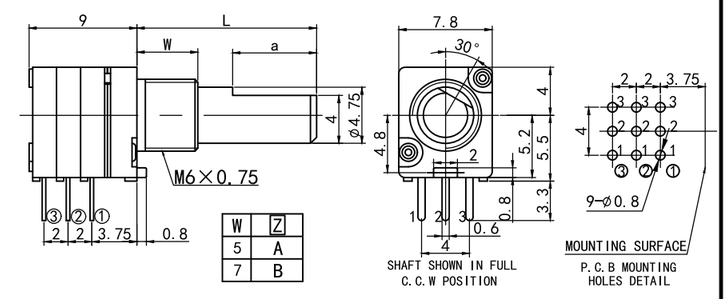

RA0801SN Z 0X-VA1

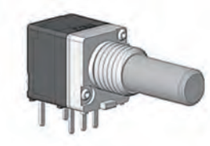

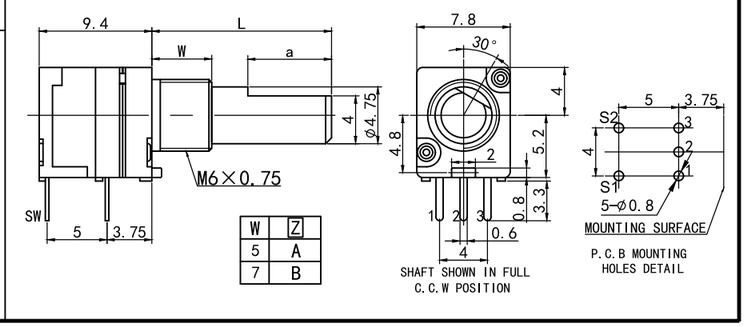

RA08 Series
ROTARY POTENTIOMETERS

RA08 SERIES COMMON SPECIFICATION	
MECHANICAL CHARACTERISTIC 机械特性	
Total Rotational Angle 旋转角度	300°±10°
Rotational Torque 旋转力矩	10~100gf.cm(Without starting torque)
Shaft Stop Strength 轴止档强度	≥3.5Kgf.cm
Push & Pull Strength 轴推拉强度	≥10Kgf
Shaft Wobble (mm p-p) 轴摆动	Within (0.7x L/20)mm p-p L=Shaft Length
Switch Working Angle 开关工作角度	50°(rotary power switch)
Switch Action Torque 开关动作力	50～200gf.cm(rotary power switch)
ELECTRICAL CHARACTERISTIC 电气特性	
Total Resistance Range 总阻及误差	1KΩ＜R＜1MΩ,±20%;1KΩ≥R or R≥1MΩ,±30%;
Resistance Taper 电阻特性曲线	Refer to Appendix I
Rower Rating 负载功率	≤0.05W
Max. Operating Voltage 最大工作电压	50V AC / 20V DC
Residual Resistance 残留电阻	Refer to Appendix I
Rotational Noise 旋转杂音	≤100mV
Insulation Resistance 绝缘阻抗	100MΩ 1 Minute DC 250V
Dielectric Voltage 耐电压	1 Minute AC 250V
ENDURANCE CHARACTERISTIC 耐久特性	
Rotational Life 旋转寿命	10,000 cycles Min

RA0801

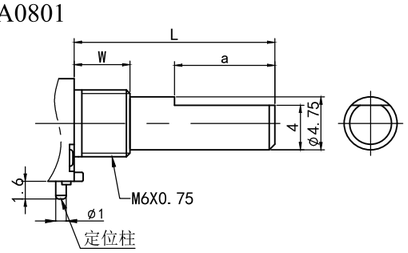

W	代号	备注
5	A	无定位柱
5	B	有定位柱
10	D	有定位柱

L	10	10	10	12	12	15	16.5	18	20	15	16
a	2.5	4	9	5	6	7	5.5	9	12	3	5
W	A、B									D	

RA0801 SERIES CIRCUIT DIAGRAM

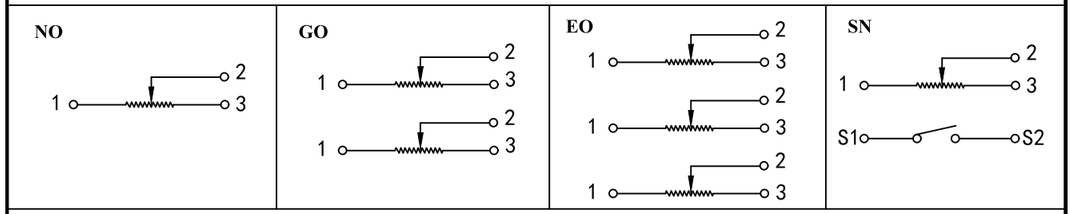

Note:In this catalog,if some parame ters lr drawings are different from the "Approval sheet",it's subject to the "Approval sheet".
注明:如说明书与承认书规格参数、图面有异，均以承认书为准。

RA0902 Series
ROTARY POTENTIOMETER

MODEL 品名 **DIMENSIONS 尺寸** **UNIT:mm**

RA0902 X Z 0X-VA1

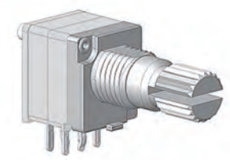

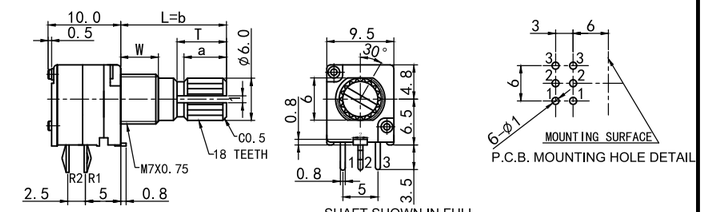

X	NO	GO	FO	JO	HO
	1联	2联	4联	6联	8联

Z	W
A	5.0
B	7.0
C	10.0

RA0902 X Z 0A-VA1

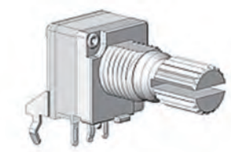

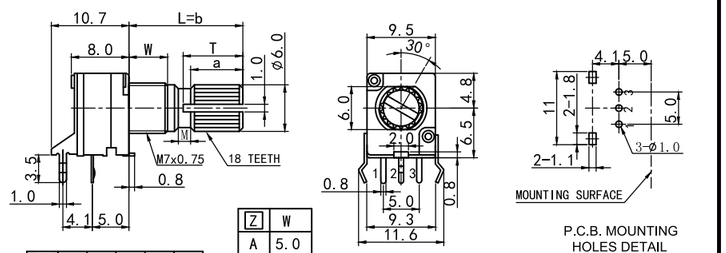

X	NO	GO	FO	JO	HO
	1联	2联	4联	6联	8联

Z	W
A	5.0
B	7.0
C	10.0

RA0902 X Z 0X-VA1

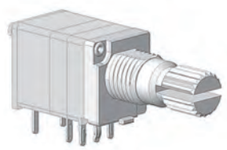

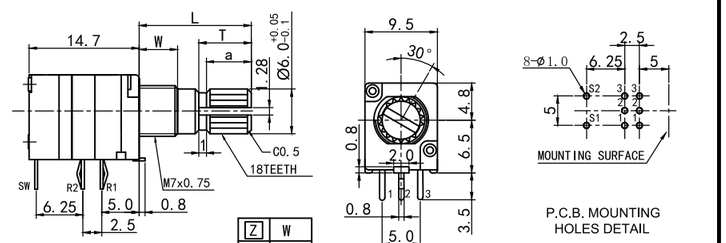

X	SN	SG
	1联	2联

Z	W
A	5.0
B	7.0
C	10.0

RA0902PN Z 0X-VA1

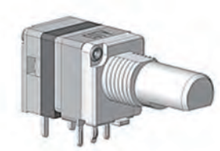

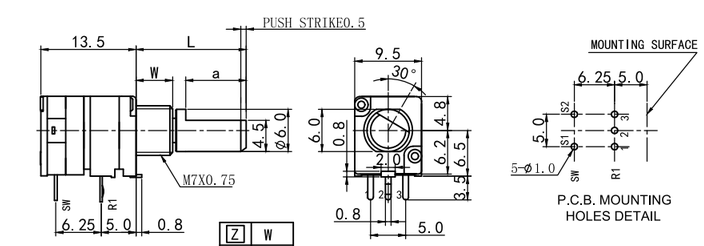

Z	W
A	5.0
B	7.0
C	10.0

RA0905/15/19 Series
ROTARY POTENTIOMETER

MODEL 品名 | **DIMENSIONS 尺寸** | **UNIT:mm**

RA0905XZ0X-VA1

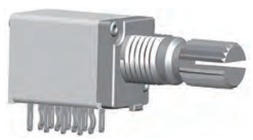

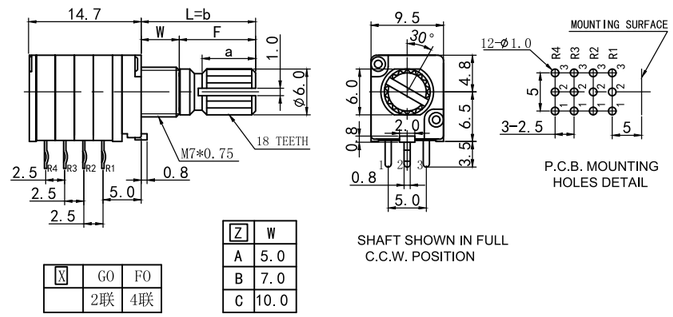

X	G0	F0
	2联	4联

Z	W
A	5.0
B	7.0
C	10.0

RA0905SXZ0X-VA1

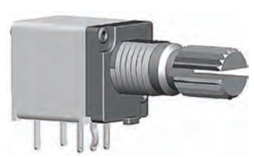

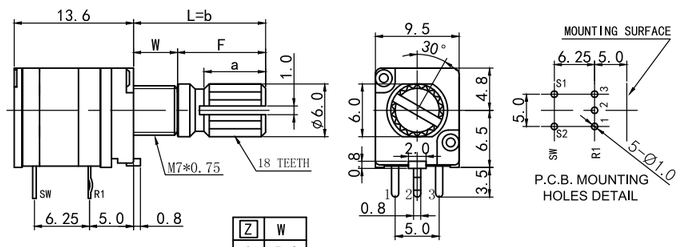

X	N	G	F
	1联	2联	4联

Z	W
A	5.0
B	7.0
C	10.0

RA0915NOZ0X-VA1

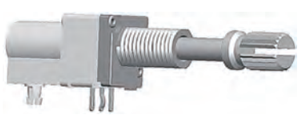

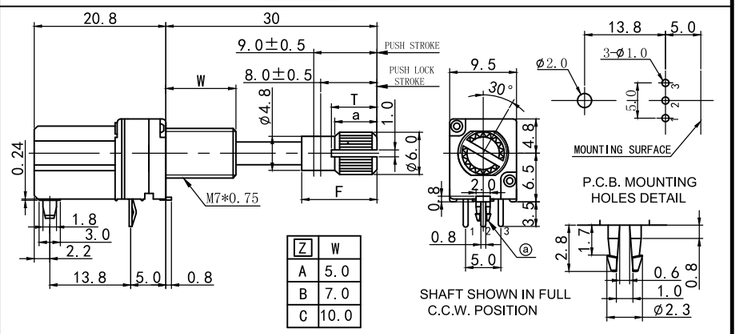

Z	W
A	5.0
B	7.0
C	10.0

RA0919XZ0B-HA1

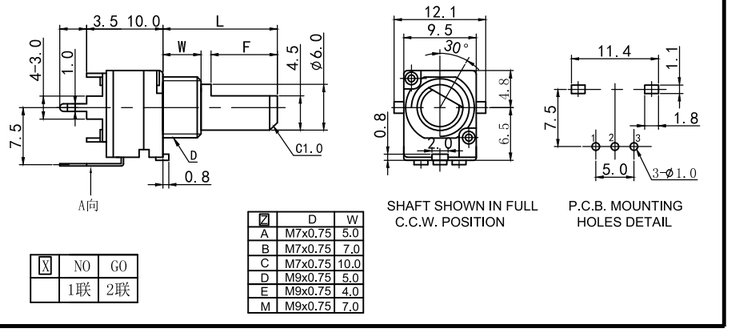

X	NO	GO
	1联	2联

Z	D	W
A	M7x0.75	5.0
B	M7x0.75	7.0
C	M7x0.75	10.0
D	M9x0.75	5.0
E	M9x0.75	4.0
M	M9x0.75	7.0

RA0919/20 Series
ROTARY POTENTIOMETER

MODEL 品名 | DIMENSIONS 尺寸 | UNIT:mm

RA0919NOX0B-HA2

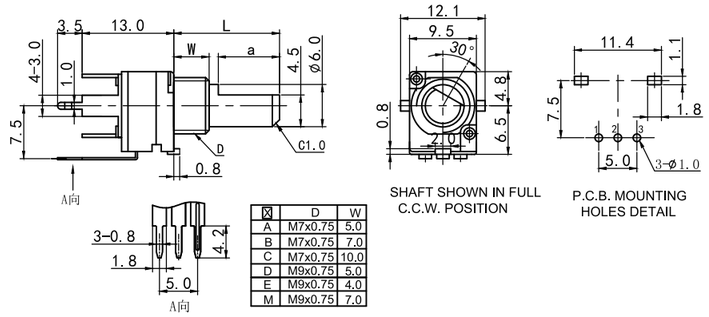

X	D	W
A	M7x0.75	5.0
B	M7x0.75	7.0
C	M7x0.75	10.0
D	M9x0.75	5.0
E	M9x0.75	4.0
M	M9x0.75	7.0

RA0919NON0X-PA1

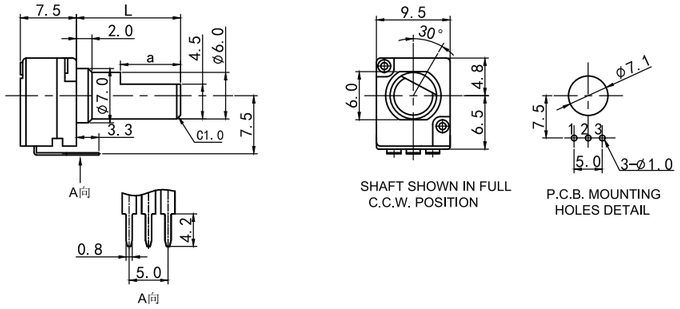

RA0919SGX0A-HA3

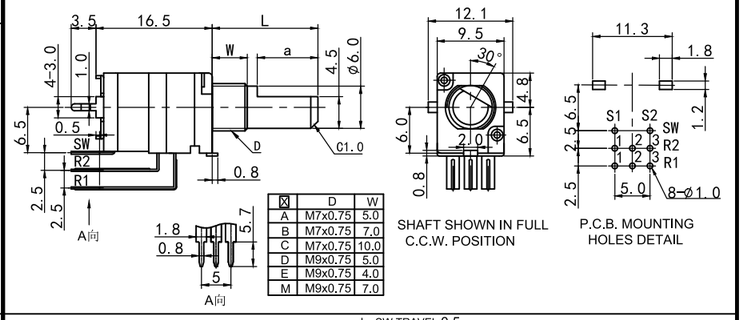

X	D	W
A	M7x0.75	5.0
B	M7x0.75	7.0
C	M7x0.75	10.0
D	M9x0.75	5.0
E	M9x0.75	4.0
M	M9x0.75	7.0

RA0920PNA0A-HA1

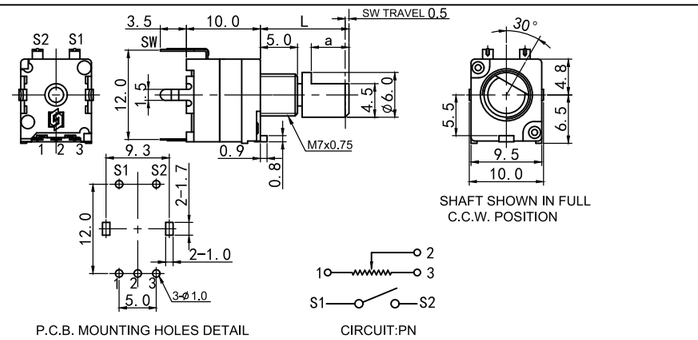

RA0921 Series
ROTARY POTENTIOMETERS

MODEL 品名 **DIMENSIONS 尺寸** **UNIT:mm**

RA0921NO[Z]0X-VA1

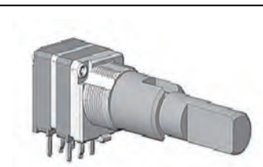

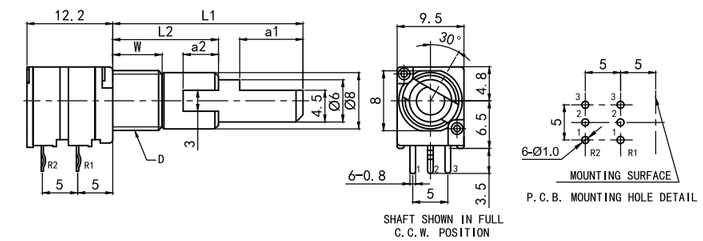

RA0921EO[Z]0X-VA1

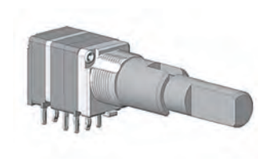

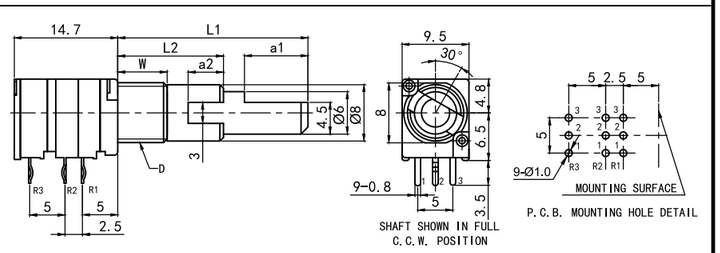

RA0921GO[Z]0X-VA1

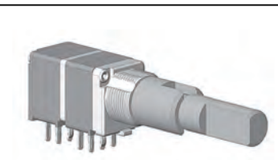

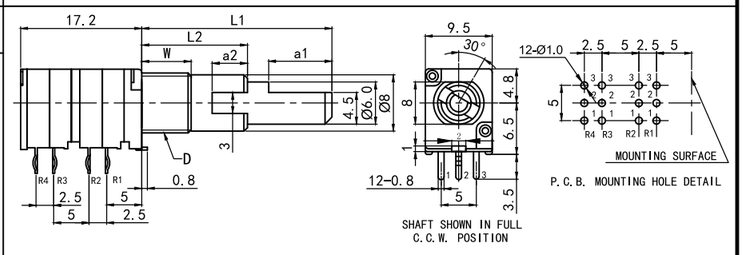

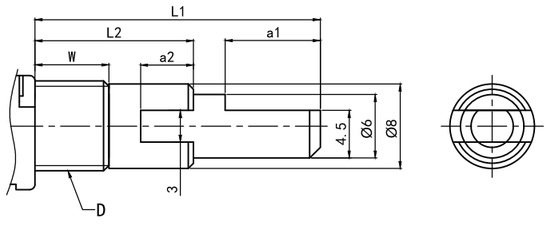

W	D	Z
5.0	M7x0.75	A
7.0	M7x0.75	B
10.0	M7x0.75	C
5.0	M9x0.75	D
4.0	M9x0.75	E
7.0	M9x0.75	M

L_1	16	19	20	20	21	29	30
a_1	5	8	5	7	4	7	12
L_2	10	10	10	11	13	17.5	15
a_2	4	4	4	5	3	4	5

RA0921 SERIES CIRCUIT DIAGRAM

NO

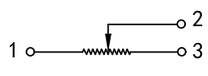

GO

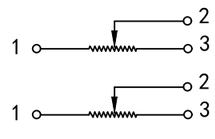

EO

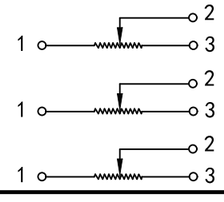

RA09 Series
ROTARY POTENTIOMETERS

RA09 SERIES COMMON SPECIFICATION		
Total Rotational Angle 旋转角度	300°±10°	
Rotational Torque 旋转力矩	20-120gf.cm(Without starting torque)	
Number of Detents 定位数目	0903	0902/05/19/21
	1CC	1/11/21/41CC
Click Slip Out Force 定位推动力	30-200gf.cm	
Shaft Stop Strength 轴止档强度	≥4Kgf.cm	
Push & Pull Strength 轴推拉强度	≥8Kgf.cm	
Switches Working Angle 开关工作角度	≤0.5mm(push on switches)	≤50°(rotary power switches)
Switches Working Torque 开关动作力	≤1.2Kgf（push on switches)	≤1Kgf(rotary power switches)
Total Resistance Range 总阻及误差	1KΩ＜R＜1MΩ，±20%；1KΩ≥R or R≥1MΩ，±30%；	
Resistance Taper 电阻特性曲线	Refer to Appendix I	
Rating Power 额定功率	≤0.05W	
Max. Operating Voltage 最大工作电压	50V AC/20V DC	
Residual Resistance 残留电阻	Refer to Appendix I	
Rotational Noise 旋转杂音	≤100mV	
Insulation Resistance 绝缘阻抗	100MΩ 1 Minute DC 250V	
Dielectric Voltage 耐电压	1 Minute AC 250V	
Tracking Error 同步误差	≤±4dB at -40~0dB	
Rotating Life 旋转寿命	10,000 cycles Min	

RA09 SERIES CIRCUIT DIAGRAM

FO

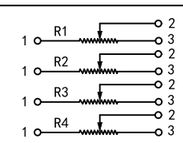

SN

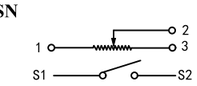

SG

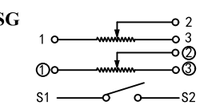

PN

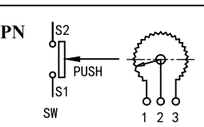

RA0922 Series
ROTARY POTENTIOMETERS

MODEL 品名	DIMENSIONS 尺寸	UNIT:mm

RA0922PA[X]0X-VA1

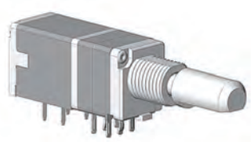

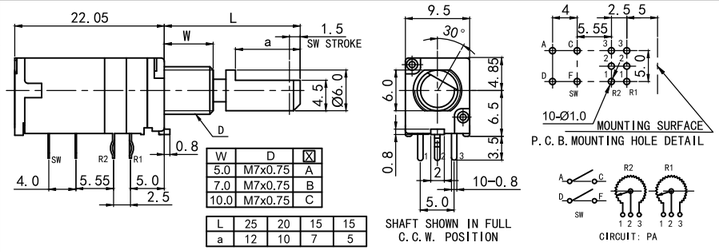

RA0922PB[X]0X-VA1

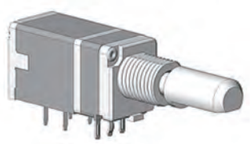

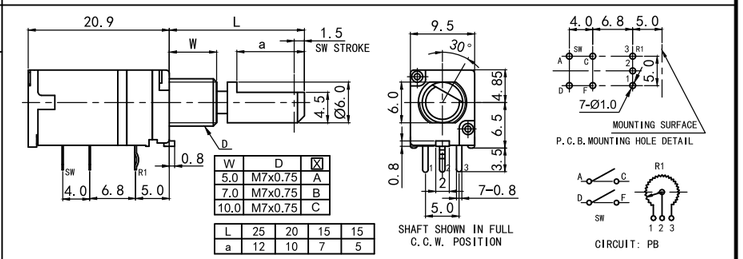

MECHANICAL CHARACTERISTIC 机械特性		
Total Rotational Angle	旋转角度	300°±10°
Rotational Torque	旋转力矩	20~250gf.cm (Without starting torque)
Shaft Stop Strength	轴止档强度	≥3.5Kgf.cm
Push & Pull Strength	轴推拉强度	≥8Kgf
Shaft Wobble (mm p-p)	轴摆动	Within (0.7x L/20)mm p-p Max. L=Shaft Length
Switch stroke	开关行程	1.5±0.5mm
Switch operation	开关按压力	1200gf.cm±800gf.cm
ELECTRICAL CHARACTERISTIC 电气特性		
Total Resistance Range	总阻及误差	1KΩ<R<1MΩ,±20%;1KΩ≥R or R≥1MΩ,±30%;
Resistance Taper	电阻特性曲线	Refer to Appendix I
Rating Power	额定功率	≤0.05W
Max. Operating Voltage	最大工作电压	50V AC / 10V DC
Residual Resistance	残留电阻	Refer to Appendix I
Rotational Noise	旋转杂音	≤100 mV
Insulation Resistance	绝缘电阻	100MΩ 1 Minute at DC 250V
Dielectric Voltage	耐电压	1 Minute at AC 300V
Tracking Error	同步误差	≤±4dB at -40-0dB
Switch rating	开关负载	3A 16V DC
Switch contace resistance	开关接触阻抗	100mΩ Max
ENDURANCE CHARACTERISTIC 耐久性能		
Rotational Life	旋转寿命	15,000 cycles Min
Switch Life	开关寿命	10,000 cycles Min

Metal Shaft Series
ROTARY POTENTIOMETERS

METAL SHAFT SERIES

DIMENSIONS UNIT:mm

FA-TYPE

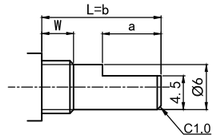

SHOWN IN FULL
C.C.W POSITION

L=b	10	13	15	17	18	20	25	30	35	40
a	2.5	7	7	8	-	12	12	12	12	12
W=5、6.5、7、11.8										

FR-TYPE

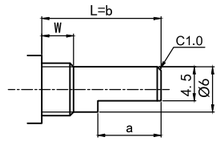

SHOWN IN FULL
C.C.W POSITION

L=b	10	15	17	18	20	25	30	35	40
a	2.5	7	8	-	12	12	12	12	12
W=5、6.5、7、11.8									

FC-TYPE

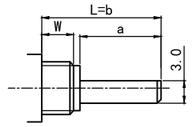

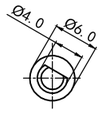

SHOWN IN FULL
C.C.W POSITION

L=b	10	15	17	18	20	25	30	35	40
a	2.5	7	8	-	12	12	12	12	12

KA-TYPE

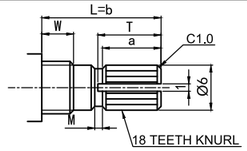

SHOWN IN FULL
C.C.W POSITION

L=b	10	15	17	18	20	25	30	35	40
T	2.5	7.0	8.5	9.0	12	14	14	14	14
a	2	6	7	7	10	12	12	12	12
M	0.5	1	1.5	2	2	4	4	4	4
W=5、6.5、7、11.8									

KB-TYPE

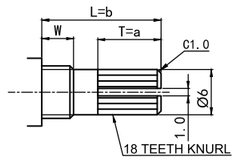

SHOWN IN FULL
C.C.W POSITION

L=b	10	15	17	18	20	25	30	35	40
T	2.5	6.5	8	8	11	14	14	14	14
a	2.5	6.5	8	8	11	14	14	14	14
W=5、6.5、7、11.8									

KC-TYPE

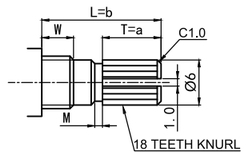

SHOWN IN FULL
C.C.W POSITION

L=b	10	15	17	18	20	25	30	35	40
T	-	-	-	-	-	14	19	-	-
a	-	-	-	-	-	14	19	-	-
M	-	-	-	-	-	2	2	-	-
W=5、6.5、7、11.8									

RA-TYPE

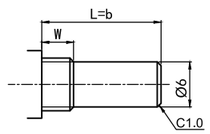

SHOWN IN FULL
C.C.W POSITION

L=b	10	15	17	18	20	25	30	35	40
W=5、6.5、7、11.8									

RB-TYPE

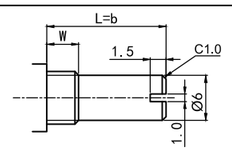

SHOWN IN FULL
C.C.W POSITION

L=b	10	15	17	18	20	25	30	35	40
W=5、6.5、7、11.8									

PT10 Series
ROTARY POTENTIOMETERS

MODEL 品名	DIMENSIONS 尺寸 UNIT:mm
PT1001NOD0X-HA1	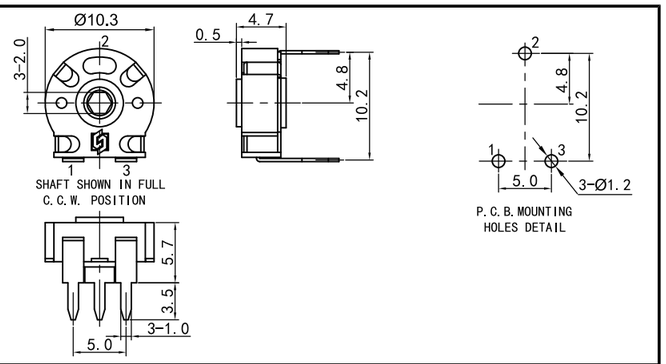
PT1001NOB0X-VA1	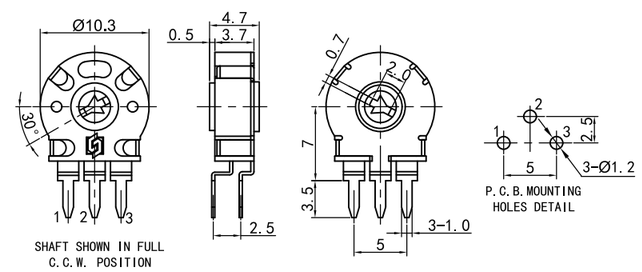
PT1001NOD0X-HA2	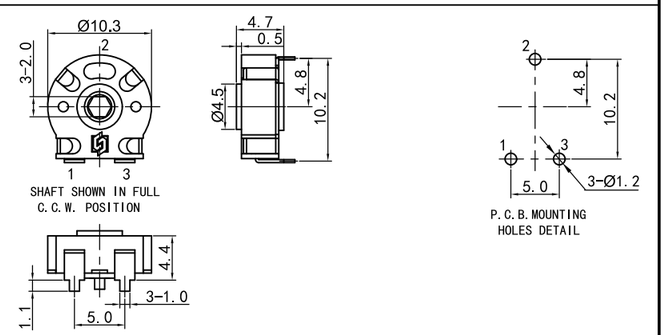
PT1001NOE0X-HA9	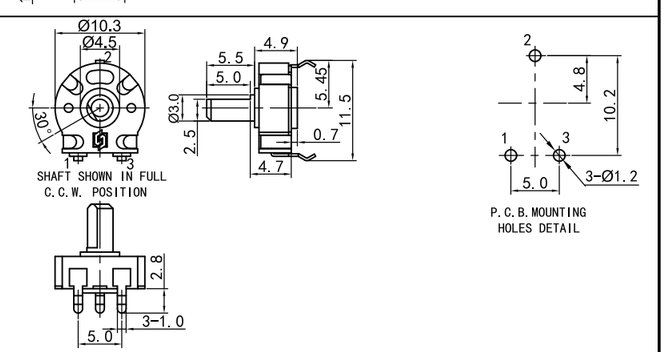

PT15/PT16 Series
ROTARY POTENTIOMETERS

MODEL 品名	DIMENSIONS 尺寸 UNIT:mm
PT1501NOA0X-HA1	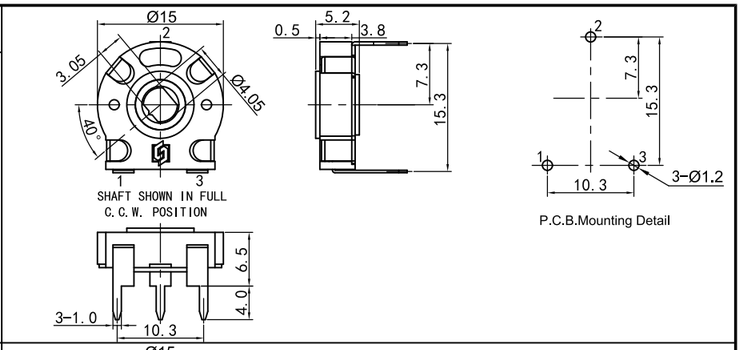
PT1501NOA0X-VA1	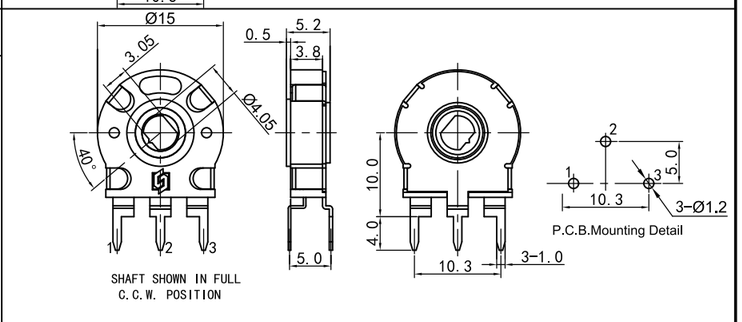
PT1501NOC0X-HA7	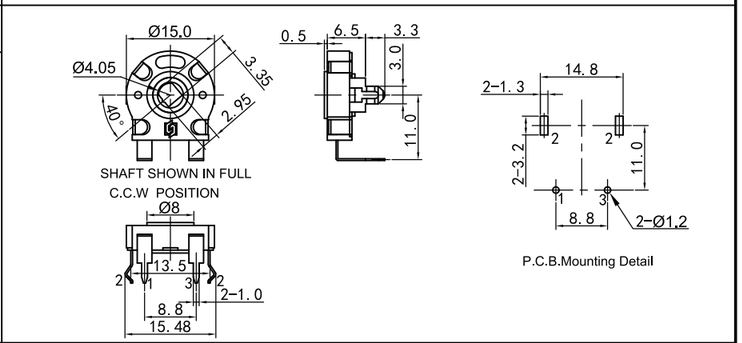
PT1601NOC0X-HA1	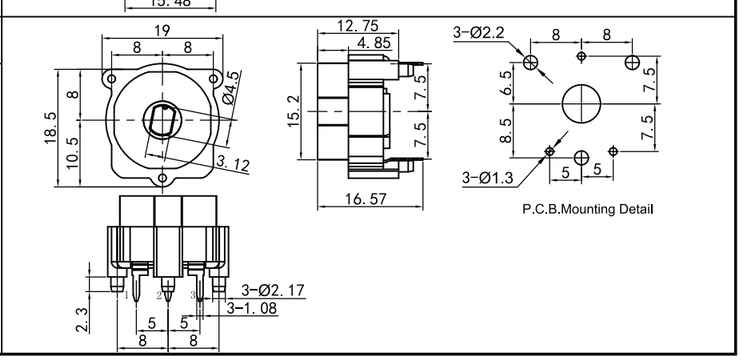

PT10/15/16 Series
ROTARY POTENTIOMETERS

PT10/15 SERIES COMMON SPECIFICATION			
MECHANICAL CHARACTERISTIC 机械特性			
		PT10	PT15
Total Rotational Angle	旋转角度	240°±10°	260°±10°
Rotational Torque	旋转力矩	10~200gf.cm (Without staring torque)	20~200gf.cm (Without staring torque)
Shaft Stop Strength	轴止档强度	≥0.5Kgf.cm	≥1Kgf.cm
ELECTRICAL CHARACTERISTIC 电气特性			
Total Resistance Range	总阻及误差	1KΩ＜R＜1MΩ,±20%;1KΩ≥R or R≥1MΩ,±30%;	
Resistance Taper	电阻特性曲线	Refer to Appendix I	
Rating Power (At 70°C)	额定功率	B Taper :0.15W Other Taper :0.07W	B Taper :0.25W Other Taper :0.12W
Max. Operating Voltage	最大工作电压	B Taper : DC 200V Other Taper : DC 100V	B Taper : DC 250V Other Taper : DC 125V
Insulation Resistance	绝缘电阻	100MΩ 1 Minute at DC 200V	100MΩ 1 Minute at DC 250V
Residual Resistance	残留电阻	Max 1% of nominal resistance	
ENDURANCE CHARACTERISTIC 耐久性能			
Rotational Life	旋转寿命	≤1KΩ 2,000cycles	≥1KΩ 10,000cycles

PT16 SERIES COMMON SPECIFICATION		
		PT16
Total Rotation Angle	全回转角度	360°
Detent Torque	定位力矩	500±100 gf.cm
Number of Detents	定位数目	16
Total Resistance	总阻	10KΩ
Resistance Law	阻值变化特性	Tape B
Power Rating	额定功率	0.15W
Rotation Life	旋转寿命	10000次C
Operating Temperature 工作温度		-25°C ～70°

Note:In this catalog,if some parameters or drawings are different from the "Approval sheet",it's subject to the "Approval sheet".
注明:如说明书与承认书规格参数、图面有异，均以承认书为准。

PT21 Series
ROTARY POTENTIOMETERS

MODEL 品名 **DIMENSIONS 尺寸** **UNIT:mm**

PT2101NOA0X-WA1

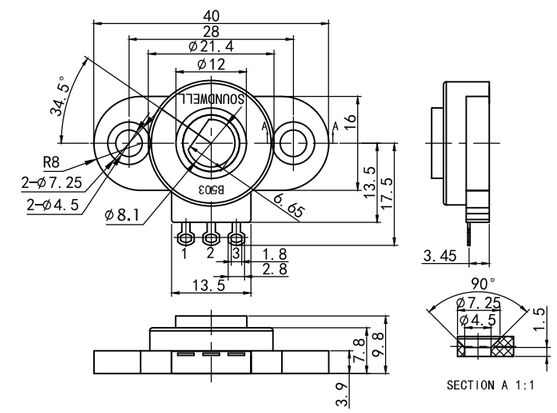

PT2102NOA0X-WA1

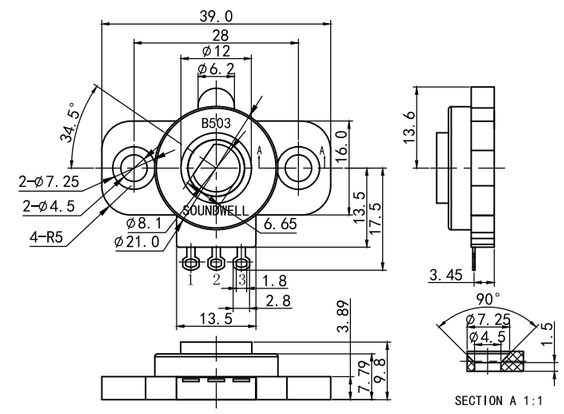

MECHANICAL CHARACTERISTIC 机械特性		
Total Rotational Angle	旋转角度	有效角度300° ±10°，机械角度360°
Rotational Torque	旋转力矩	20~150gf.cm(Without staring torque)
ELECTRICAL CHARACTERISTIC 电气特性		
Operating Temperature Range	工作温度	-20℃～105℃
Total Resistance Range	总阻及误差	1KΩ＜R＜1MΩ，±20%;1KΩ≥R or R≥1MΩ，±30%;
Resistance Taper	电阻特性曲线	Refer to Appendix I
Rating Power(70℃)	额定功率	B Taper :0.15W, Other Taper :0.05W
Max. Operating Voltage	最大工作电压	DC 50V / AC 20 V
Insulation Resistance	绝缘电阻	100MΩ 1 Minute at DC 250V
ENDURANCE CHARACTERISTIC 耐久性能		
Rotational Life	旋转寿命	50,000 cycles Min

PT26 Series
ROTARY POTENTIOMETERS

MODEL 品名 **DIMENSIONS 尺寸** **UNIT:mm**

PT2601NHA0X-WA1

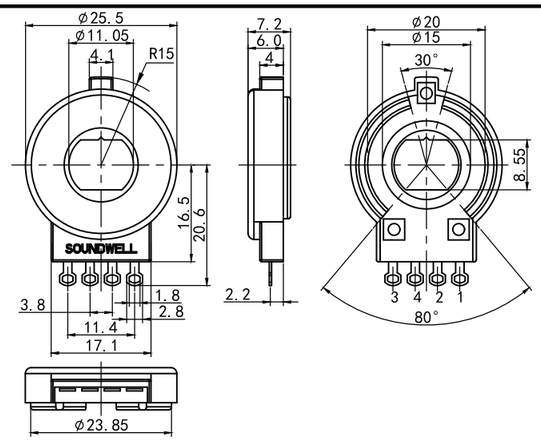

MECHANICAL CHARACTERISTIC 机械特性		
Total Rotational Angle	旋转角度	有效角度235° ±2°，机械角度360°
Rotational Torque	旋转力矩	≤100gf.cm
ELECTRICAL CHARACTERISTIC 电气特性		
Operating Temperature Range	工作温度	-20℃～90℃
Resistance different	分段阻值	第2档 1KΩ±10%; 第3档 2KΩ±10%; 第4档 3KΩ±10%; 第5档 4KΩ±10%; 第6档 5KΩ±10%
Residual Resistance	残留电阻	Refer to Appendix I
Rating Power(70℃)	额定功率	0.5W
Max. Operating Voltage	最大工作电压	DC 50V / AC 20 V
Insulation Resistance	绝缘电阻	100MΩ 1 Minute at DC 250V
ENDURANCE CHARACTERISTIC 耐久性能		
Rotational Life	旋转寿命	30,000 cycles Min

RJ12/18 Series
JOYSTICK POTENTIOMETER

MODEL 品名 **DIMENSIONS 尺寸** **UNIT:mm**

RJ1202NOX0X-VH1

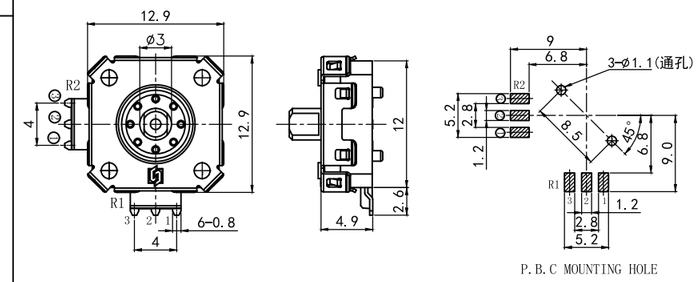

RJ1802NOX0X-HA1

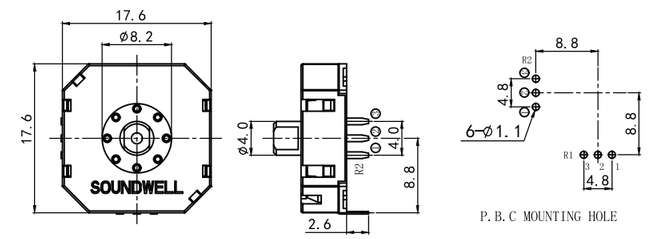

RJ12/18 SERIES COMMON SPECIFICATION

		RJ12	RJ18
MECHANICAL CHARACTERISTIC 机械特性			
Total travel slide	滑动行程	2.4mm	4mm
Sliding force	滑 动 力	110±50 gf	110±50 gf
Stopper strength	止动强度	≥200gf	≥2Kg
ELECTRICAL CHARACTERISTIC 电气特性			
Total Resistance Range	总阻及误差	10KΩ±20%	10KΩ±20%
Resistance Taper	电阻特性曲线	0B	0B
Rating Power	额定功率	≤0.0125W	≤0.0125W
Max. Operating Voltage	最大工作电压	AC 50V	AC 50V
Voltage divider error	分压误差	44%～56%	44%～56%
Rotational Noise	旋转杂音	≤300 mV	≤300 mV
Insulation Resistance	绝缘电阻	100MΩ 1 Minute at DC 250V	
Dielectric Voltage	耐电压	1 Minute at AC 250V	
ENDURANCE CHARACTERISTIC 耐久特性			
Rotational Life	旋转寿命	100,000 cycles Min	100,000 cycles Min

RJ13 Series
JOYSTICK POTENTIOMETER

MODEL 品名 **DIMENSIONS 尺寸** **UNIT:mm**

RJ1301NOA0X-VA1

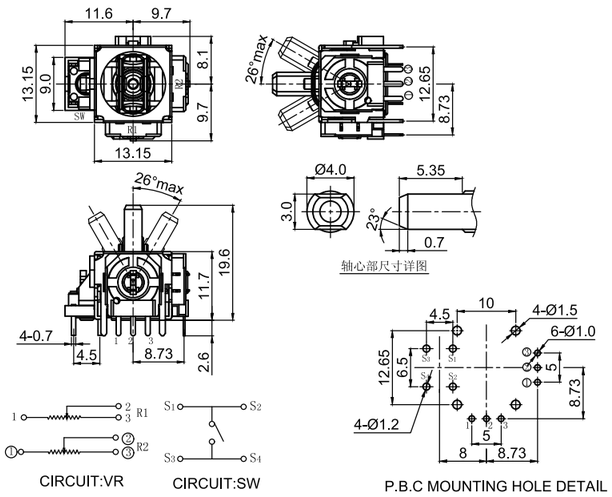

RJ13 SERIES COMMON SPECIFICATION

MECHANICAL CHARACTERISTIC 机械特性		
Operating Force	作动力	120±70 gf
Operating Angle	操作角度	26° Max
The stopper strength of the lever 摇杆止动强度		≥3Kgf
ELECTRICAL CHARACTERISTIC 电气特性		
Total Resistance Range	总阻及误差	10KΩ±20%
Resistance Taper	电阻特性曲线	0B
Rating Power	额定功率	≤0.0125W
Max. Operating Voltage	最大工作电压	AC 50V
Voltage divider error	分压误差	44%～56%
Rotational Noise	旋转杂音	≤300 mV
Insulation Resistance	绝缘电阻	100MΩ 1 Minute at DC 250V
Dielectric Voltage	耐电压	1 Minute at AC 250V
ENDURANCE CHARACTERISTIC 耐久特性		
Rotational Life	旋转寿命	2，000,000 cycles Min
SWITCH CHARACTERISTICS 开关规格		
Operating force	按压力	740±300gf
Switch travel	开关移动量	$0.5^{+0.4}_{-0.2}$mm
Contact resistance	接触阻抗	＜100mΩ
Push operating life	开关按压寿命	1，000,000 cycles Min

RJ16 Series
JOYSTICK POTENTIOMETER

MODEL 品名 **DIMENSIONS 尺寸** **UNIT:mm**

RJ1605NOB0X-VA1

Plastic Lever

RJ1606NOB0X-VA1

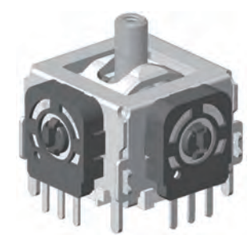

Metal Lever

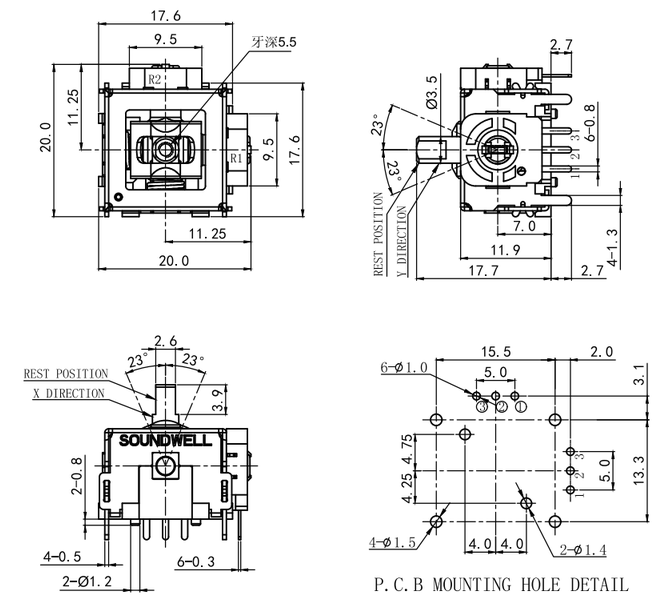

RJ1606 SERIES COMMON SPECIFICATION

MECHANICAL CHARACTERISTIC 机械特性		
Operating Force	作动力	160±50 gf
Operating Angle	操作角度	23°
The stopper strength of the lever 摇杆止动强度		≥3Kgf
ELECTRICAL CHARACTERISTIC 电气特性		
Total Resistance Range	总阻及误差	10KΩ±20%
Resistance Taper	电阻特性曲线	0B
Rating Power	额定功率	≤0.0125W
Max. Operating Voltage	最大工作电压	DC 5V
Voltage divider error	分压误差	42%～58%
Rotational Noise	旋转杂音	≤300 mV
Insulation Resistance	绝缘电阻	100MΩ 1 Minute at DC 250V
Dielectric Voltage	耐电压	1 Minute at AC 250V
ENDURANCE CHARACTERISTIC 耐久特性		
Rotational Life	旋转寿命	200,000 cycles Min

RJ17 Series
JOYSTICK POTENTIOMETER

MODEL 品名 **DIMENSIONS 尺寸** **UNIT:mm**

RJ1701PGA0A-HA1

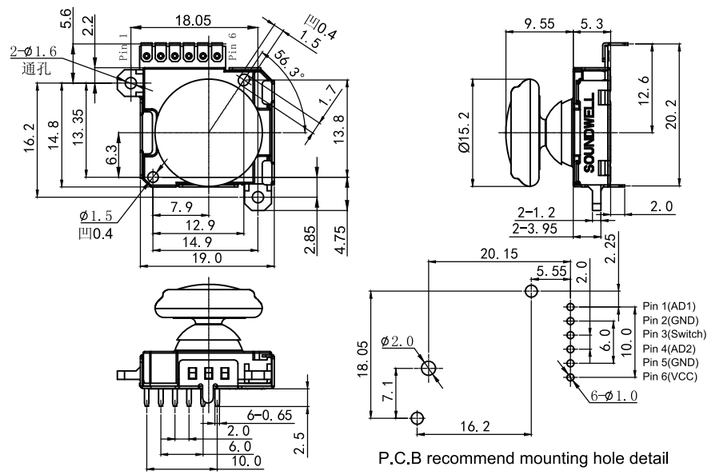

P.C.B recommend mounting hole detail

RJ17 SERIES CIRCUIT DIAGRAM

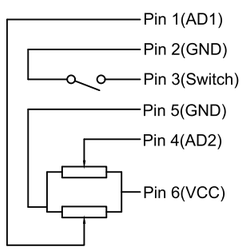

RJ17 SERIES COMMON SPECIFICATION

MECHANICAL CHARACTERISTIC 机械特性		
Operating Force	作动力	55±30 gf
Operating Angle	操作角度	16°
The stopper strength of the lever	摇杆止动强度	≥3Kgf
ELECTRICAL CHARACTERISTIC 电气特性		
Total Resistance Range	总阻及误差	5KΩ±20%
Resistance Taper	电阻特性曲线	0B
Rating Power	额定功率	≤0.005W
Max. Operating Voltage	最大工作电压	DC 5V
Voltage divider error	分压误差	40%～60%
Rotational Noise	旋转杂音	≤300 mV
Insulation Resistance	绝缘电阻	10MΩ 1 Minute at DC 100V
Dielectric Voltage	耐电压	1 Minute at AC 100V
ENDURANCE CHARACTERISTIC 耐久特性		
Rotational Life	旋转寿命	1，000,000 cycles Min
SWITCH CHARACTERISTICS	开关规格	
Operating force	按压力	750±300gf
Switch travel	开关移动量	$0.4^{+0.4}_{-0.2}$mm
Contact resistance	接触阻抗	＜200Ω
Push operating life	开关按压寿命	1，000,000 cycles Min

RJ39 Series
JOYSTICK POTENTIOMETER

MODEL 品名 **DIMENSIONS 尺寸** **UNIT:mm**

RJ3902NOA0X-HW1

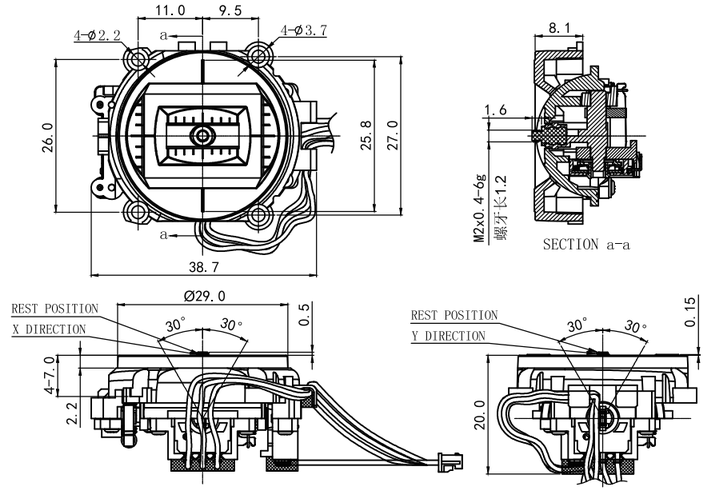

RJ39 WIRING DIAGRAM

P1 —— 红 —— 1
P2 —— 白 —— 2
P3 —— 黑 —— 3
P4 —— 红 —— ①
P5 —— 黄 —— ②
P6 —— 黑 —— ③

RJ39 SERIES CIRCUIT DIAGRAM

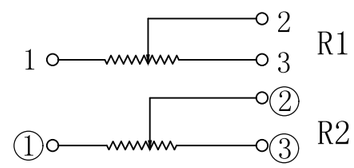

RJ39 SERIES COMMON SPECIFICATION

MECHANICAL CHARACTERISTIC 机械特性		
Operating Force	作动力	90±30 gf
Operating Angle	操作角度	30°
The stopper strength of the lever	摇杆止动强度	≥3Kgf
ELECTRICAL CHARACTERISTIC 电气特性		
Total Resistance Range	总阻及误差	10KΩ±20%
Resistance Taper	电阻特性曲线	0B
Rating Power	额定功率	≤0.01W
Max. Operating Voltage	最大工作电压	DC 5V
Voltage divider error	分压误差	40%～60%
Rotational Noise	旋转杂音	≤300 mV
Insulation Resistance	绝缘电阻	10MΩ 1 Minute at DC 100V
Dielectric Voltage	耐电压	1 Minute at AC 100V
ENDURANCE CHARACTERISTIC 耐久特性		
Rotational Life	旋转寿命	200,000 cycles Min

MJ Series
MAGNETIC JOYSTICK

MODEL 品名 **DIMENSIONS 尺寸** **UNIT:mm**

MJ13

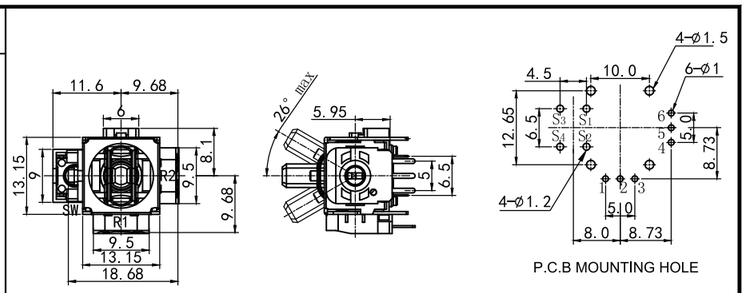

P.C.B MOUNTING HOLE

MJ16

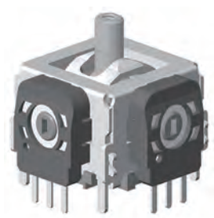

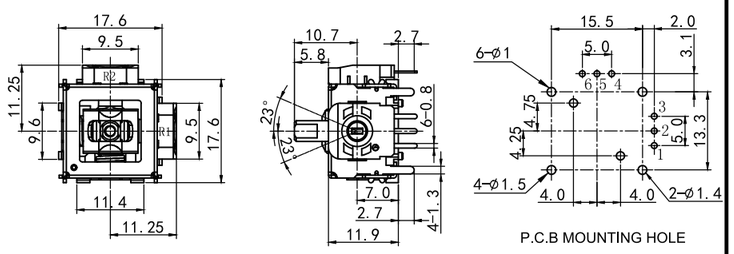

P.C.B MOUNTING HOLE

MJ39

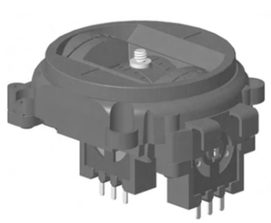

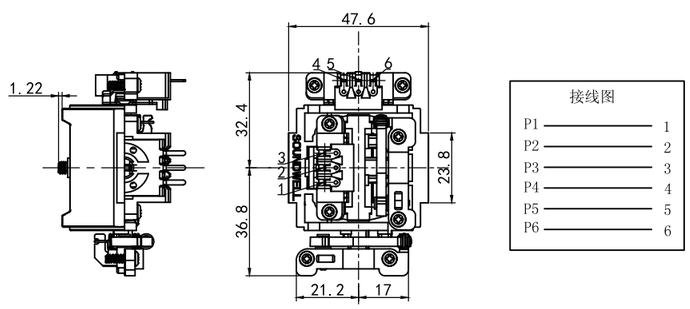

MJ系列为无接触式霍尔摇杆，主要电性能参数：

直流工作参数：T=25° C

参数	符号	测试条件	最小值	典型值	最大值	单位
工作电压	V_{DD}	工作时	1.6	3.3	5.5	V
电源电流	I_{DD}	V_{DD}=1.8V		0.8	1.1	mA
电源电流	I_{DD}	V_{DD}=3.3V		1.4	1.8	mA
输出电阻	R_O				120	Ω
噪音	V_{NO}	BW=10-10KHZ		2.4		mV_{RMS}
斩波频率	F_C			25		Khz
带宽	B_W			5		Khz
最低输出电压	V_{OUT}	V_{DD}=3.3V	0.0		0.1	V
最高输出电压	V_{OUT}	V_{DD}=3.3V	3.2		3.3	V

RC0801/04Series
ROTARY POTENTIOMETER

MODEL 品名 **DIMENSIONS 尺寸** **UNIT:mm**

RC0801GCX0Z-HA1

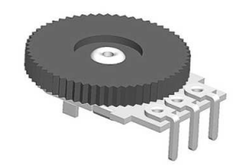

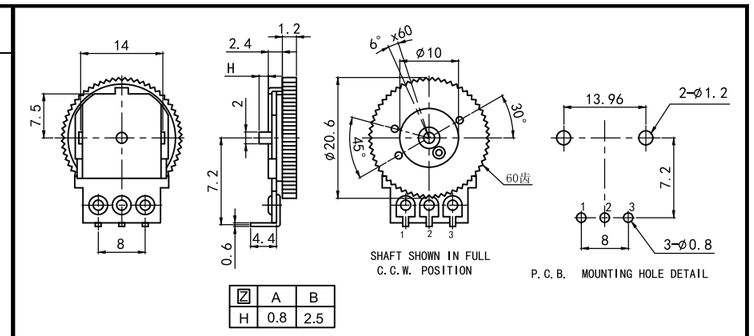

RC0804GOX0F-HA3

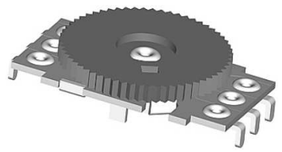

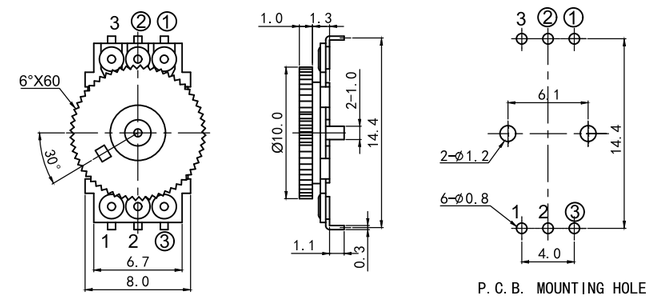

RC0801 SERIES CIRCUIT

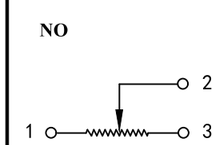

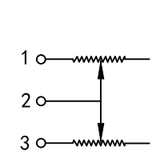

RC0804 SERIES CIRCUIT

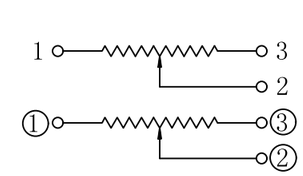

RC08 SERIES COMMON SPECIFICATION

Total Rotational Angle	旋转角度	270°±10° (RC0801NO)	120°±10° (RC0804)
Rotational Torque	旋转力矩	10~70gf.cm (Without starting torque)	
Shaft Stop Strength	轴止档强度	≥0.8Kgf.cm	
Total Resistance Range	总阻及误差	1KΩ＜R＜1MΩ±20%; 1KΩ≥R≥1MΩ±30%;	
Resistance Taper	电阻特性曲线	Refer to Appendix I	
Rating Power	额定功率	Linear taper 0.2W; Other taper 0.1W	
Rotational Life	旋转寿命	10,000 cycles Min	

RC0805 Series
ROTARY POTENTIOMETERS

MODEL 品名	DIMENSIONS 尺寸	UNIT:mm

RC0805NOX0X-HA1

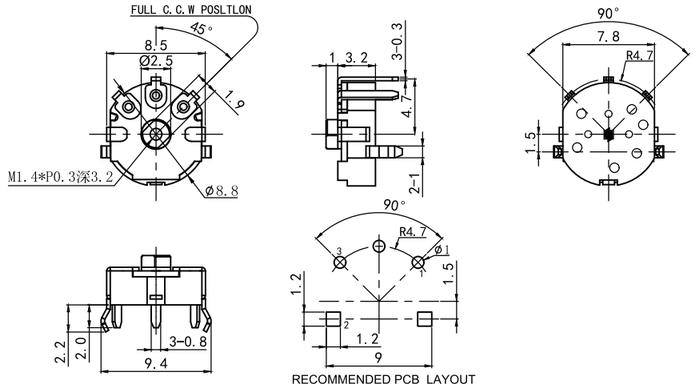

RC0805 X X0X-HA1

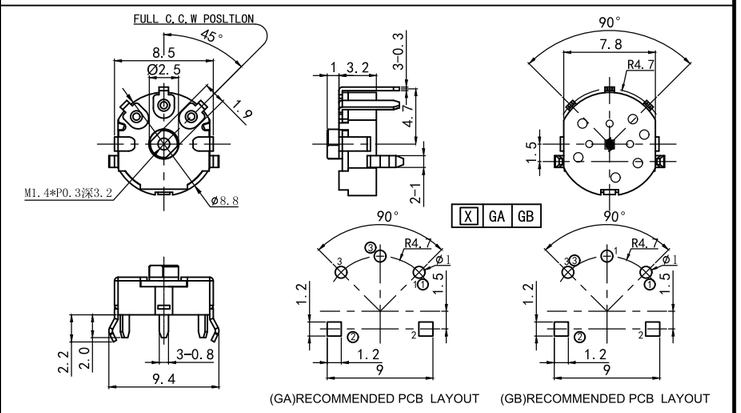

RC0805 SERIES COMMON SPECIFICATION

Total Rotational Aagle	旋转角度	200°
Rotational Torque	旋转力矩	10～100gf.cm
Operating Temperature	工作温度	-10˚C～+60˚C
Shaft Stop Strength	轴止档强度	1Kgf.cm
Rating Power	额定功率	0.05W
Total Resistance & Tolerance	总阻及误差	1KΩ＜R＜1MΩ，±20%;1KΩ≥R≥1MΩ，±30%
Resistance Taper	电阻特性曲线	3B
Rotational Noise	旋转杂音	≤100mV
Rotational Life	旋转寿命	10,000次 Min

RC0805 SERIES CIRCUIT DIAGRAM

NO

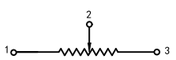

GA

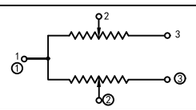

GB

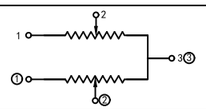

RC1001 Series
ROTARY POTENTIOMETERS

MODEL 品名	DIMENSIONS 尺寸	UNIT:mm

RC1001GOX0A-HA X

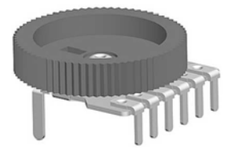

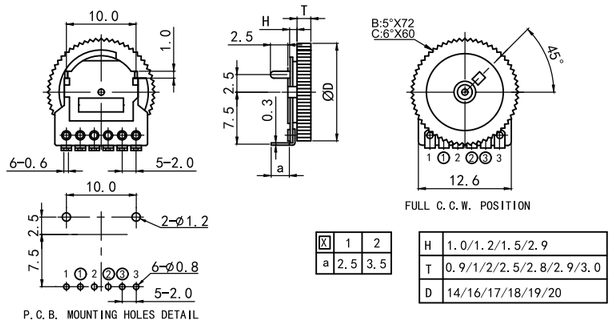

RC1001NOX0A-HA X

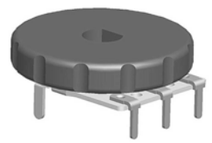

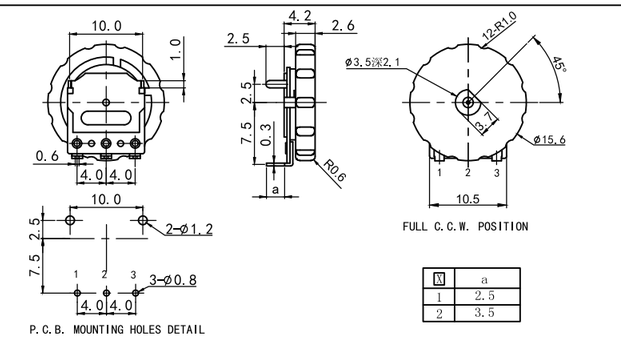

RC1001NOX0A-HA X

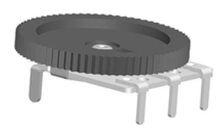

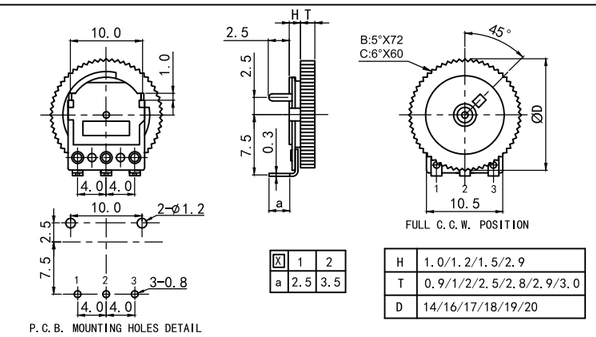

RC1001NOX0A-VA X

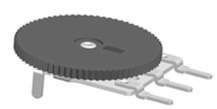

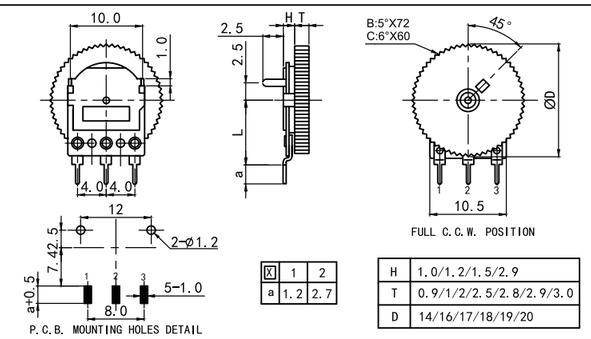

RC1001 Series
ROTARY POTENTIOMETERS

RC1001 SERIES COMMON SPECIFICATION		
MECHANICAL CHARACTERISTIC 机械特性		
Total Rotational Angle	旋转角度	270°± 10°
Rotational Torque	旋转力矩	10～70gf.cm(Without starting torque)
Shaft Stop Strength	轴止档强度	≥0.8Kgf.cm
ELECTRICAL CHARACTERISTIC 电气特性		
Total Resistance Range	总阻及误差	1KΩ<R～1MΩ±20%，1KΩ≥R≥1MΩ±30%
Resistance Taper	电阻特性曲线	Refer to Appendix I
Rating Power	额定功率	Linear taper 0.02W; Other taper 0.01W
Max. Operating Voltage	最大工作电压	DC 12V
Residual Resistance	残留电阻	Refer to Appendix I
Rotational Noise	旋转杂音	≤100 mV
Insulation Resistance	绝缘电阻	100MΩ 1 Minute at DC 100V
Dielectric Voltage	耐电压	1 Minute at AC 250V
Tracking Error	同步误差	≤±4dB at -40～0dB
ENDURANCE CHARACTERISTIC 耐久性能		
Rotational Life	旋转寿命	10,000 cycles Min

RC1001 SERIES CIRCUIT DIAGRAM

NO

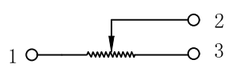

GA

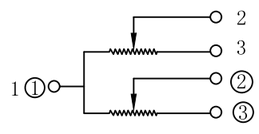

GB

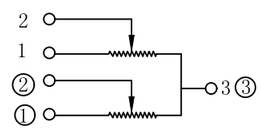

Note:In this catalog,if some parameters in the drawings are different from the "Approval sheet",it's subject to the "Approval sheet".
注明:如说明书与承认书规格参数、图面有异，均以承认书为准。

RC1501 Series
ROTARY POTENTIOMETERS

MODEL 品名 **DIMENSIONS 尺寸** **UNIT:mm**

RC1501GHX0A-HA1

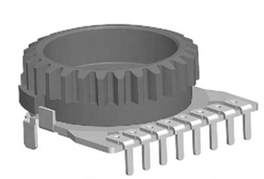

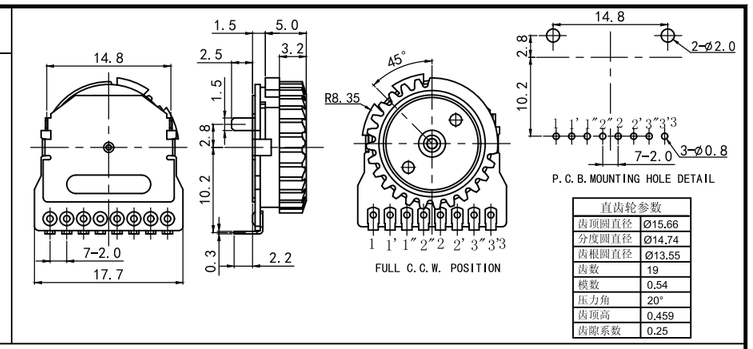

直齿轮参数	
齿顶圆直径	Ø15.66
分度圆直径	Ø14.74
齿根圆直径	Ø13.55
齿数	19
模数	0.54
压力角	20°
齿顶高	0.459
齿隙系数	0.25

RC1501 SERIES COMMON SPECIFICATION		
MECHANICAL CHARACTERISTIC 机械特性		
Total Rotational Angle	旋转角度	270°± 10°
Rotational Torque	旋转力矩	10～70gf.cm(Without starting torque)
Starting force	起动力矩	Rotational torque+30gf.cm
Shaft Stop Strength	轴止档强度	≥0.8Kgf.cm
ELECTRICAL CHARACTERISTIC 电气特性		
Total Resistance Range	总阻及误差	1KΩ<R～1MΩ±20%，1KΩ≥R≥1MΩ±30%
Resistance Taper	电阻特性曲线	Refer to Appendix I
Rating Power	额定功率	Linear taper 0.02W; Other taper 0.01W
Max. Operating Voltage	最大工作电压	DC 12V
Residual Resistance	残留电阻	Refer to Appendix I
Rotational Noise	旋转杂音	≤100 mV
Insulation Resistance	绝缘电阻	100MΩ 1 Minute at DC 100V
Dielectric Voltage	耐电压	1 Minute at AC 250V
ENDURANCE CHARACTERISTIC 耐久性能		
Rotational Life	旋转寿命	10,000 cycles Min

RC1501 SERIES CIRCUIT DIAGRAM

GH

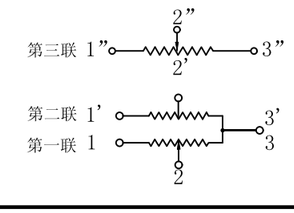

RC1003 Series
ROTARY POTENTIOMETERS

MODEL 品名 **DIMENSIONS 尺寸** **UNIT:mm**

RC1003GOX0X-HA2

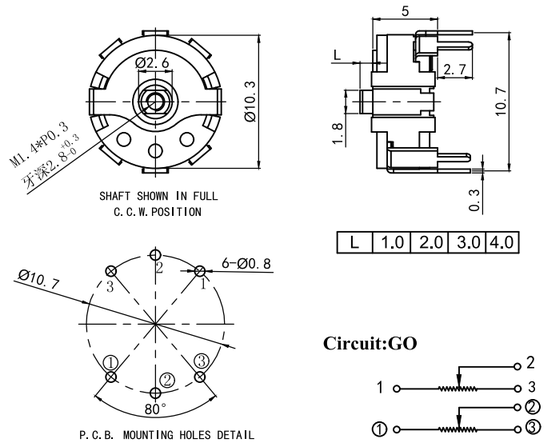

RC1003 SERIES COMMON SPECIFICATION

MECHANICAL CHARACTERISTIC 机械特性		
Total Rotational Angle	旋转角度	230°±10°
Rotational Torque	旋转力矩	5～100gf.cm(Without starting torque)
Shaft Stop Strength	轴止档强度	≥1Kgf.cm
ELECTRICAL CHARACTERISTIC 电气特性		
Total Resistance Range	总阻及误差	500Ω<R<1MΩ,±20%；500Ω≥R or R≥1MΩ,±30%;
Resistance Taper	电阻特性曲线	Refer to Appendix I
Rating Power	额定功率	≤0.05W
Max. Operating Voltage	最大工作电压	50V AC
Residual Resistance	残留电阻	Refer to Appendix I
Rotational Noise	旋转杂音	≤100 mV
Tracking Error	同步误差	≤±4dB at -40～0dB
ENDURANCE CHARACTERISTIC 耐久性能		
Rotational Life	旋转寿命	5,000 cycles Min

Products Series Code Explanations
SLIDE POTENTIOMETERS

Slide Series Code Explanation
直滑式电位器型号说明

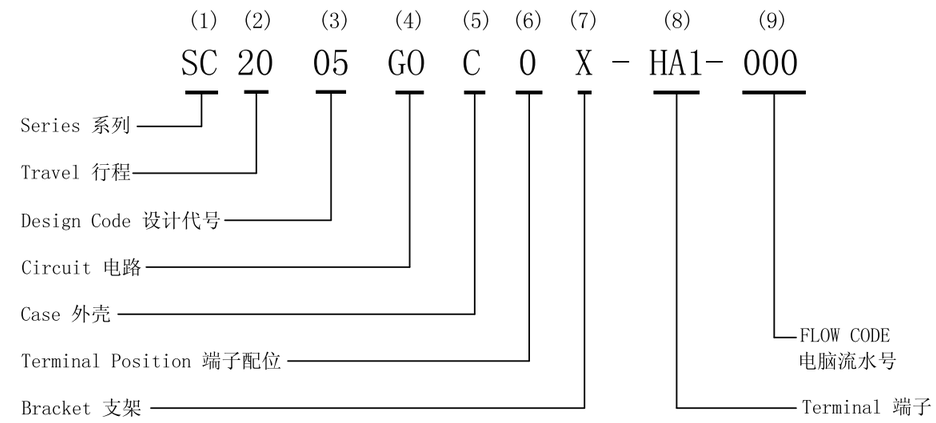

(1)&(2)&(3)&(4): Series、Travel、Design code and Circuit / 系列、行程、设计代号及电路。

SERIES 系列	TRAVEL & DESIGN CODE 行程及设计代号	TRAVEL / 行程（mm/毫米）								
		04	05	10	15	20	30	45	60	100
SC	SCXX03					◉	◉	◉	◉	
	SCXX04						◉			
	SCXX05				◉	◉	◉	◉	◉	
SK	SKXX91							◉	◉	◉
SV	SVXXXX	◉	◉	◉	◉	◉				
SN	SNXX07			◉	◉	◉	◉			
	SNXX09					◉	◉			
SB	SB4501							◉		
SA	SAXX05					◉	◉	◉	◉	◉
SCA	SCA1005									◉

(5)&(6)&(7): Case、Terminal position & Bracket are controlled by SOUNDWELL。
外壳、端子配位及支架由本公司内部受控。

(8):Terminal:controlled by SOUNDWELL。 端子:由本公司内部受控。

(9):Flow code(Resistance 、 Taper、Material、Detent、Lever and Request of exceptive) Controned by SOUNDWELL。
电脑流水号（阻值、线性、材质、定位、推柄及特殊要求)为我司内部受控。

SA□□05 Series
SLIDE POTENTIOMETERS

MODEL 品名 | **DIMENSIONS 尺寸** | **UNIT:mm**

SA⊠⊠05GOA0A-HA1

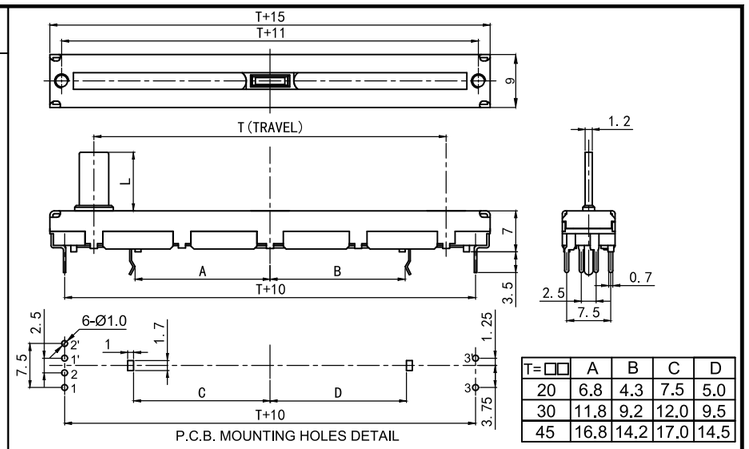

T=□□	A	B	C	D
20	6.8	4.3	7.5	5.0
30	11.8	9.2	12.0	9.5
45	16.8	14.2	17.0	14.5

SA⊠⊠05NOA0A-HA1

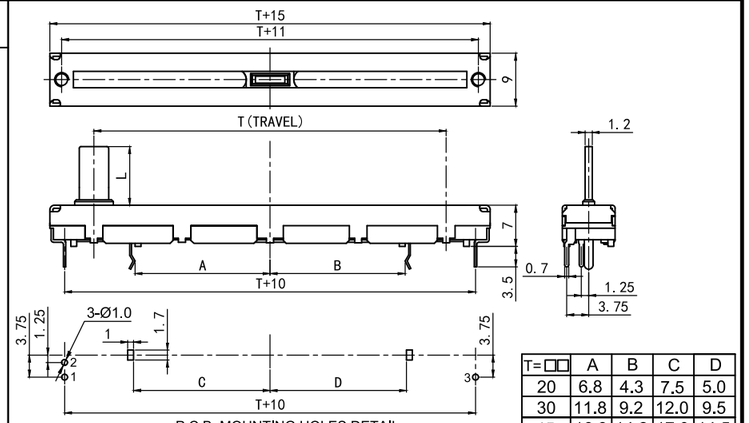

T=□□	A	B	C	D
20	6.8	4.3	7.5	5.0
30	11.8	9.2	12.0	9.5
45	16.8	14.2	17.0	14.5

SA⊠⊠05NJA0A-HA1

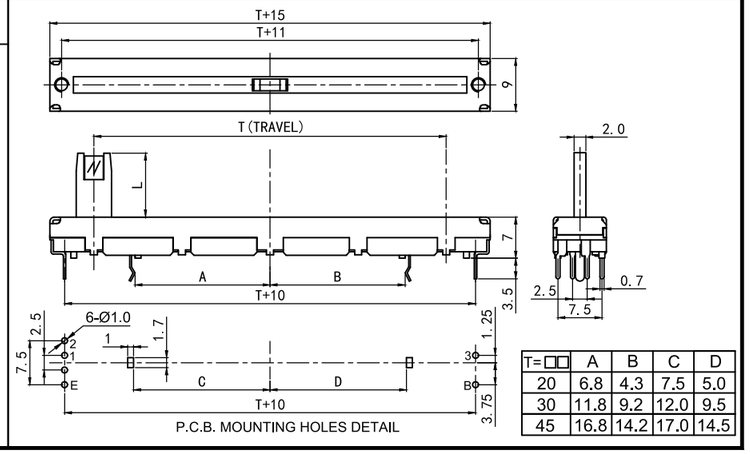

T=□□	A	B	C	D
20	6.8	4.3	7.5	5.0
30	11.8	9.2	12.0	9.5
45	16.8	14.2	17.0	14.5

SA□□05 Series
SLIDE POTENTIOMETERS

MODEL 品名 | **DIMENSIONS 尺寸** | **UNIT:mm**

SA6005GOA0B-HA1

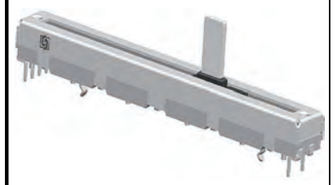

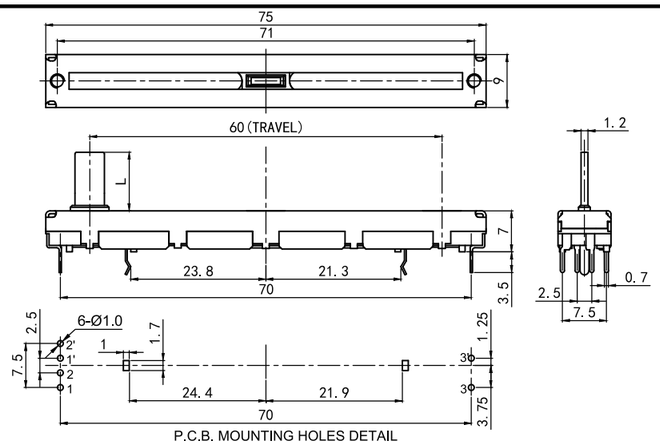

SA6005NOA0B-HA1

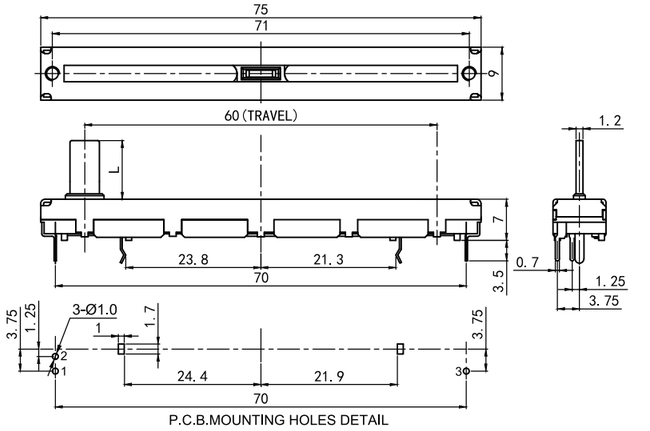

SA6005GOA0A-HA1

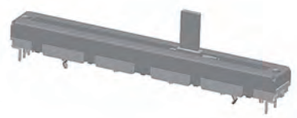

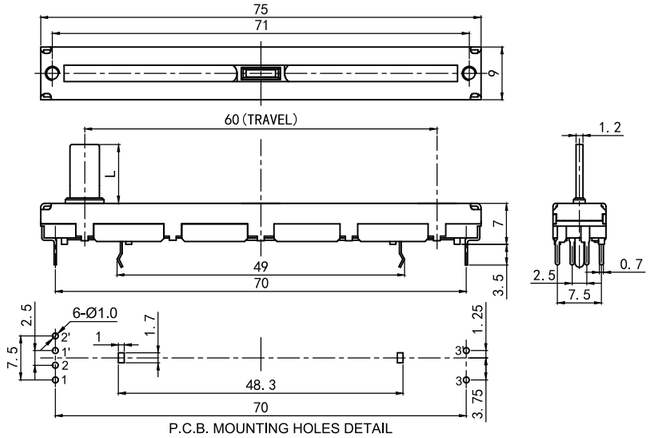

SA□□05 Series
SLIDE POTENTIOMETERS

MODEL 品名	DIMENSIONS 尺寸 UNIT:mm
SA6005NOA0A-HA1	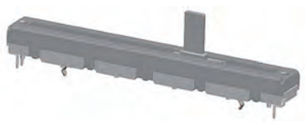 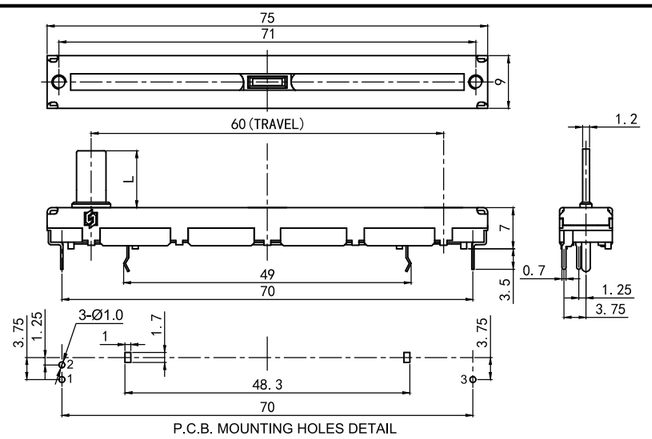 P.C.B. MOUNTING HOLES DETAIL
SA6005NJA0A-HA1	 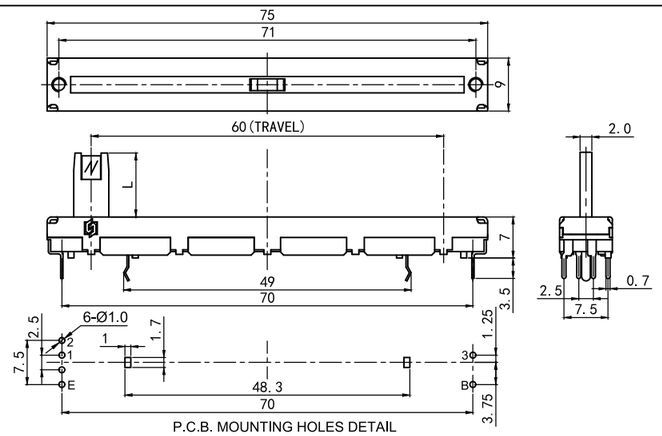 P.C.B. MOUNTING HOLES DETAIL

SA□□05 SERIES CIRCUIT DIAGRAM

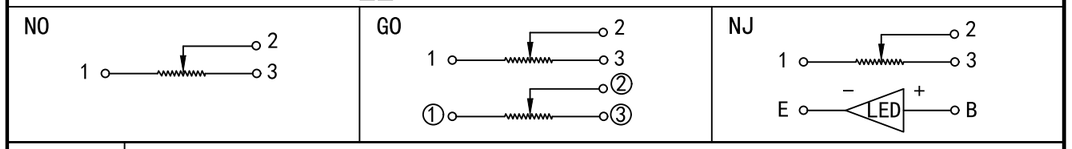

MODEL	SA□□05 SERIES UNIT:mm					
LEVER TYPE	M12A (M12C)	M16B	M13A	M12B	P14B	P15A
DIMENSIONS	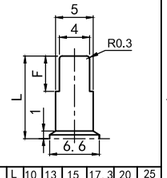	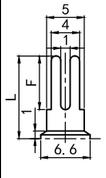	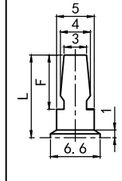	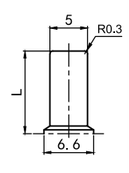	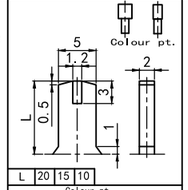	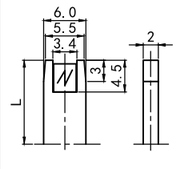
	L 10 13 15 17.3 20 25 M12A F 7 8 10 10 10 10 M12C F 5	L 10.4 F 7	L 10 15 20 25 F 7 10 10 10	L 10 15	L 20 15 10 Colour pt. R N E W Red Green Orange White	L 10 15 20

SA10003/10005 Series
SLIDE POTENTIOMETERS

MODEL 品名	DIMENSIONS 尺寸 UNIT:mm
SA10003NOA0A-HA1	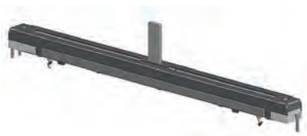 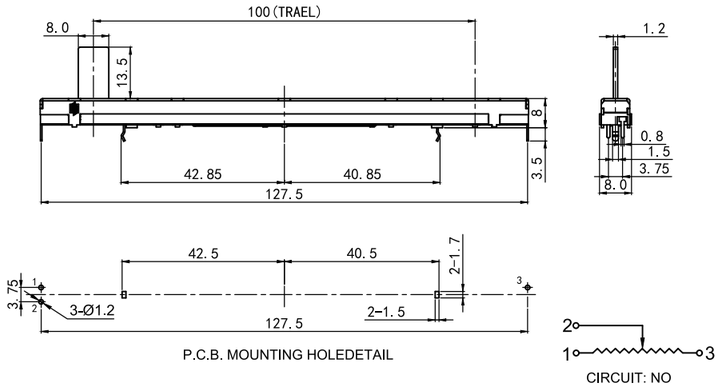 P.C.B. MOUNTING HOLEDETAIL CIRCUIT: NO
SA10005GOA0A-HA1	 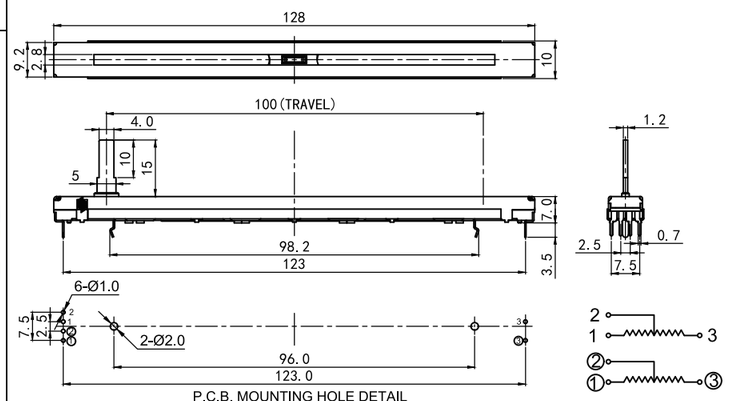 P.C.B. MOUNTING HOLE DETAIL CIRCUIT:GO
SA10005NOA0A-HA1	 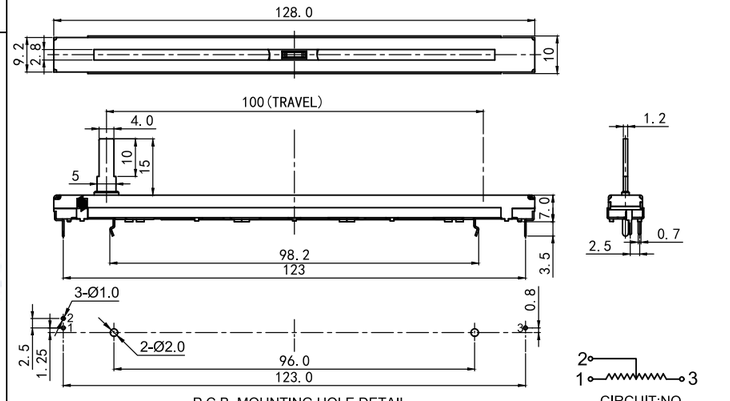 P.C.B. MOUNTING HOLE DETAIL CIRCUIT:NO

SC□□03 Series
SLIDE POTENTIOMETERS

MODEL 品名 | **DIMENSIONS 尺寸** | **UNIT:mm**

SC⊠⊠03NOA0X-HA1

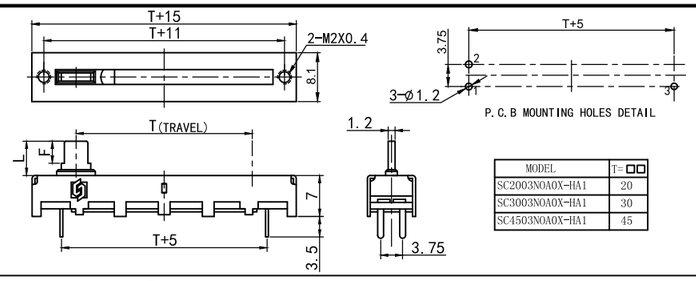

MODEL	T=□□
SC2003NOA0X-HA1	20
SC3003NOA0X-HA1	30
SC4503NOA0X-HA1	45

SC⊠⊠03NOA0A-HA1

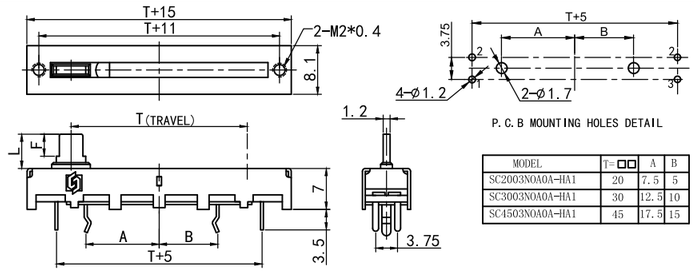

MODEL	T=□□	A	B
SC2003NOA0A-HA1	20	7.5	5
SC3003NOA0A-HA1	30	12.5	10
SC4503NOA0A-HA1	45	17.5	15

SC□□03 SERIES CIRCUIT DIAGRAM

NO

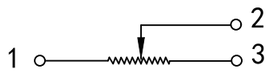

MODEL	SC □□ 03 SERIES						UNIT:mm
LEVER TYPE	M12A						M12B
DIMENSIONS	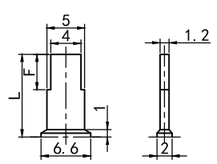						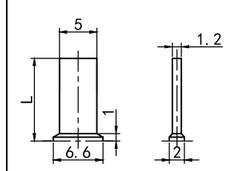
	L	8	10	15	17.3	20	25
	F	3	7	10	10	10	10
							L 10 15

LEVER TYPE	M13A	P14B
DIMENSIONS	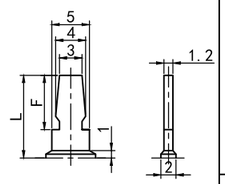	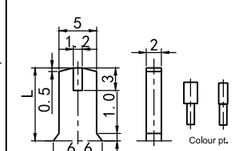
	L 10 15 20 25	L 10 15 20
	F 7 10 10 10	Colour pt.
		R□ Red / N□ Green / E□ Orange / W□ White

SC3004 Series
SLIDE POTENTIOMETERS

MODEL 品名 | **DIMENSIONS 尺寸** | **UNIT:mm**

SC3004NOB⊠X-HA1

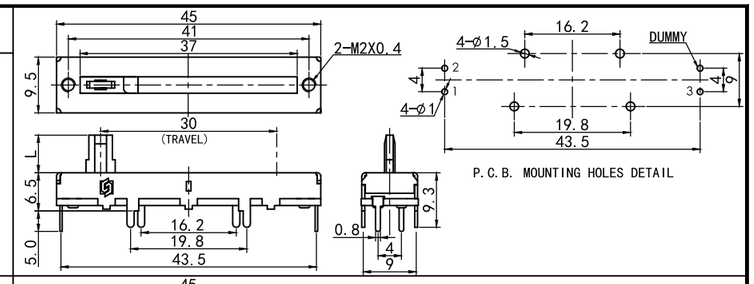

SC3004NTB⊠X-HA1

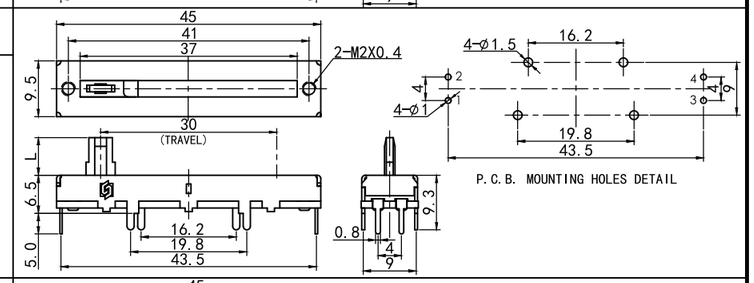

SC3004GOB0X-HA1

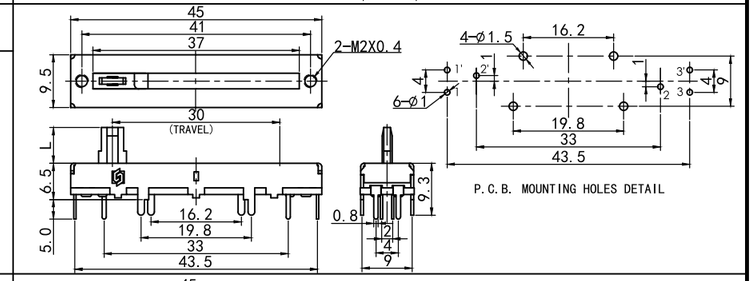

SC3004NOA⊠X-HA1

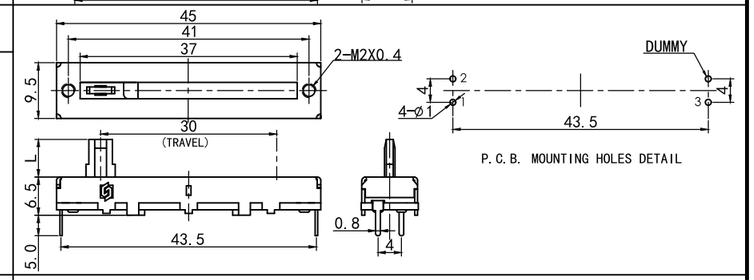

SC3004NTA⊠X-HA1

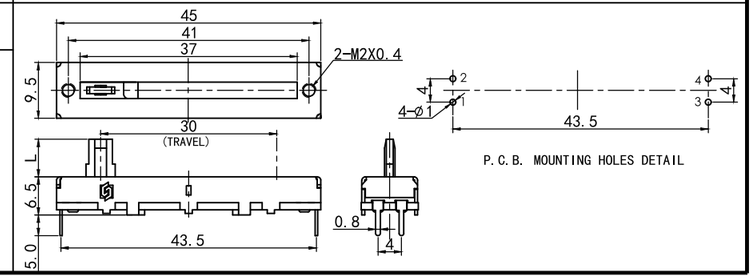

SC□□04/□□05 Series
SLIDE POTENTIOMETERS

MODEL 品名 | **DIMENSIONS 尺寸** | **UNIT:mm**

SC3004GOA0X-HA1

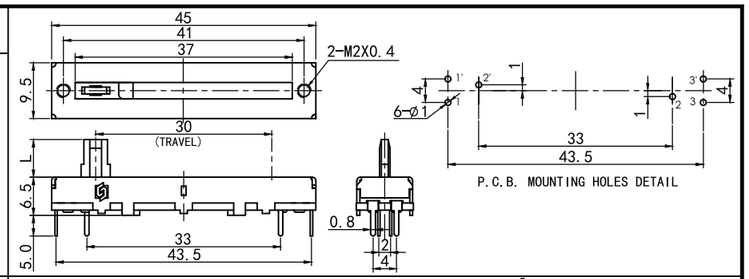

SC☒☒05NOB☐X-HA☒

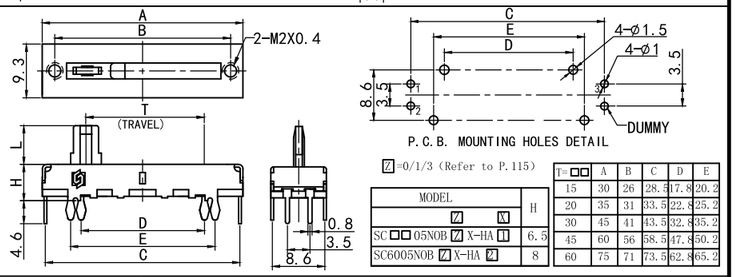

☐=0/1/3 (Refer to P.115)

MODEL	H
☐ ☒	
SC□□05NOB☐X-HA☒	6.5
SC6005NOB☐X-HA☐	8

T=□□	A	B	C	D	E
15	30	26	28.5	17.8	20.2
20	35	31	33.5	22.8	25.2
30	45	41	43.5	32.8	35.2
45	60	56	58.5	47.8	50.2
60	75	71	73.5	62.8	65.2

SC☒☒05GOB0X-HA☒

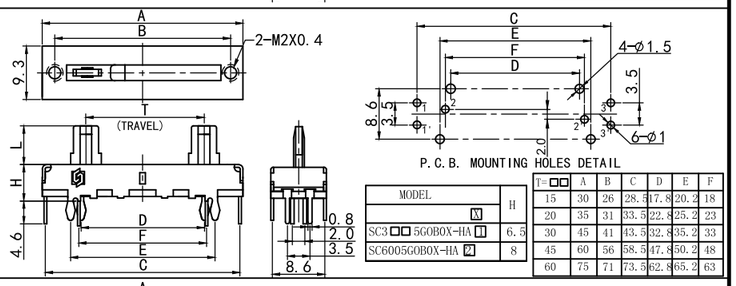

MODEL	H
☒	
SC3□□5G0B0X-HA☐	6.5
SC6005G0B0X-HA☐	8

T=□□	A	B	C	D	E	F
15	30	26	28.5	17.8	20.2	18
20	35	31	33.5	22.8	25.2	23
30	45	41	43.5	32.8	35.2	33
45	60	56	58.5	47.8	50.2	48
60	75	71	73.5	62.8	65.2	63

SC☒☒05NOA☐X-HA☒

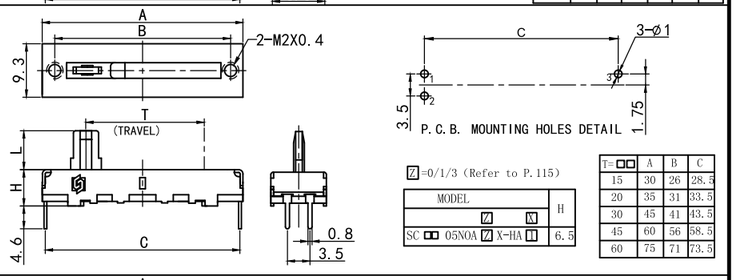

☐=0/1/3 (Refer to P.115)

MODEL	H
☐ ☒	
SC□□05NOA☐X-HA☐	6.5

T=□□	A	B	C
15	30	26	28.5
20	35	31	33.5
30	45	41	43.5
45	60	56	58.5
60	75	71	73.5

SC☒☒05GOA☐X-HA☒

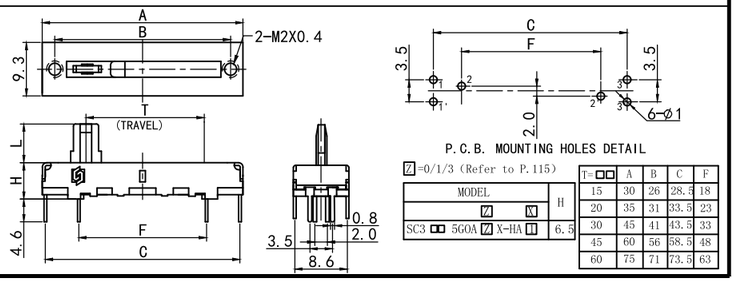

☐=0/1/3 (Refer to P.115)

MODEL	H
☐ ☒	
SC3□□5G0A☐X-HA☐	6.5

T=□□	A	B	C	F
15	30	26	28.5	18
20	35	31	33.5	23
30	45	41	43.5	33
45	60	56	58.5	48
60	75	71	73.5	63

SCA1005 Series
SLIDE POTENTIOMETERS

MODEL 品名 | **DIMENSIONS 尺寸** | **UNIT:mm**

SCA1005NOB0X-HA1

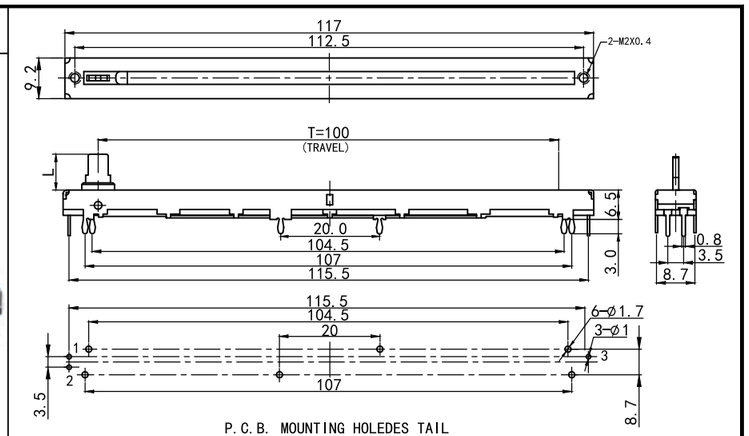

SCA1005SC □□ 04/SC □□ 05 SERIES CIRCUIT DIAGRAM

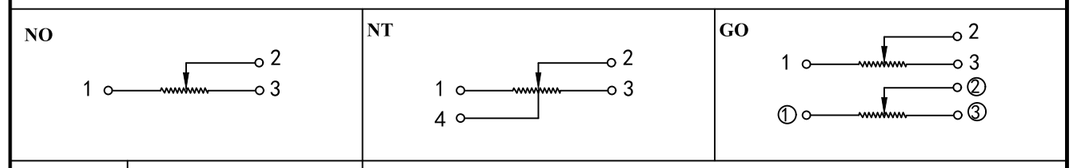

MODEL	SC □□ 04 SERIES	SC □□ 05 SERIES		
LEVER TYPE	P04A (P04B)	P14B	M12A (M12C)	M12B
DIMENSIONS	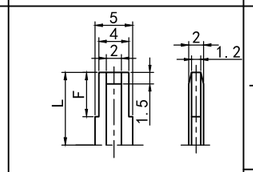	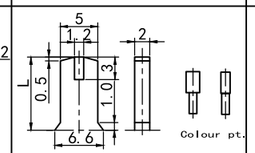	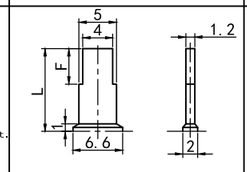	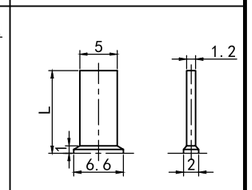

	L	5	10	12.5	15	18	20
P04A	F	5	5	5	5	5	5
P04B	F	0	–	–	–	–	–

L	10	15	20

Colour pt.

R☐	N☐	E☐	W☐
Red	Green	Orange	White

	L	10	14	15	17.5	20	25
M12A	F	7	9	10	10	10	10
M12C	F	5	–	–	–	–	–

L	10	15

MODEL	SC □□ 05 SERIES			
LEVER TYPE	M13A	M16B	P04A	P04B
DIMENSIONS	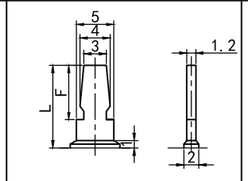	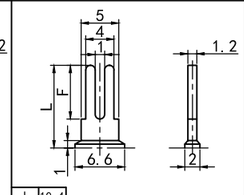	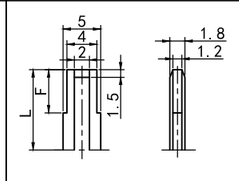	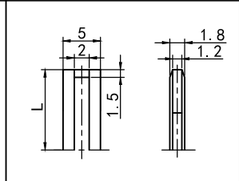

L	10	15	20
F	7	10	10

L	10.4
F	7

L	5	10	12.5	15	18	20
F	5	5	5	5	5	5

L	5	10

SCA1003 Series
SLIDE POTENTIOMETERS

MODEL 品名 **DIMENSIONS 尺寸** **UNIT:mm**

SCA1003NOA0A-HA1

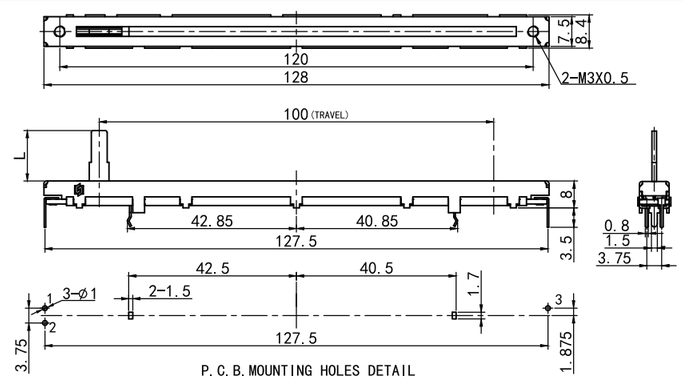

SCA1003NOA0B-HA1

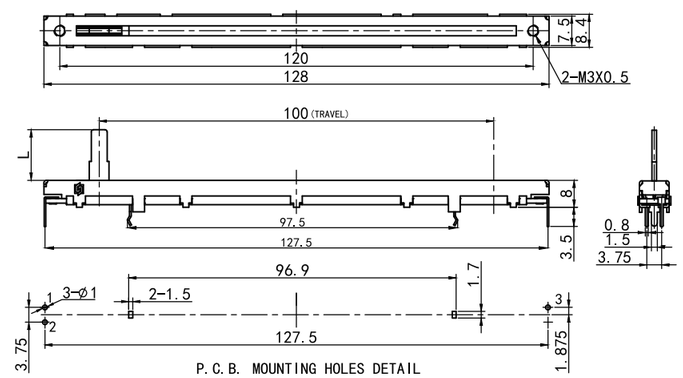

MODEL SCA1003 SERIES

LEVER TYPE	M12A/C	M13A	M17A
DIMENSIONS	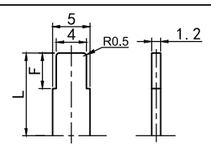	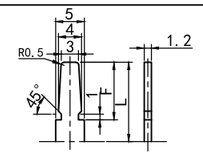	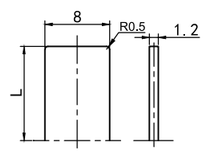

	L	9.5	13.5	16.8	19.5	14.5
M12A	F	7	10	10	10	10
M12C	F	5				

L	9.5	14.5	19.5
F	7	10	10

L	7.5	9.5	11.5	14

LEVER TYPE	M17B	M17C	M18A
DIMENSIONS	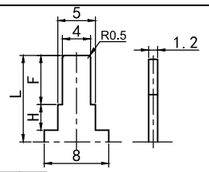	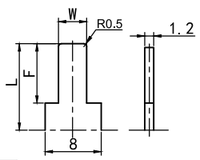	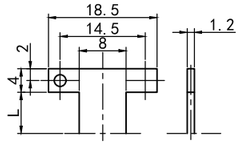

L	9.5	14.5	19.5
F	7	10	10
H	1.8	3.8	3.8

L	14.5	8.5
F	11	6.5
W	4.35	4

L	4.2	9.2

SC/SA/SCA Series
SLIDE POTENTIOMETERS

SC/SA/SCA SERIES COMMON SPECIFICATION

MECHANICAL CHARACTERISTIC 机械特性		
Operating Force	推动力	15~150gf
Lever Stop Strength	柄止档强度	≥3Kgf
Lever Wobble	滑柄偏摆量	Within (0.7x L/20)mm p-p L=Shaft Length
Click Force	定位推动力	80~330gf
ELECTRICAL CHARACTERISTIC 电气特性		
Total Resistance Range	总阻及误差	1KΩ≤R≤1MΩ,±20%;1KΩ≥R or R≥1MΩ,±30%;
Resistance Taper	电阻特性曲线	Refer to Appendix I

Rating Power 额定功率	TAPER \ TRAVEL		15mm	20mm	30mm	45mm	60mm	100mm
	B	Single	0.05	0.1	0.2	0.25	0.2	0.2
		Dual	0.025	0.05	0.1	0.125	0.2	0.2
	Other	Single	0.025	0.05	0.1	0.125	0.1	0.1
		Dual	0.012	0.025	0.05	0.06	0.1	0.1
Rating Voltage(V) 额定电压	B		100	200	200	200	200	200
	Other Taper		50	150	150	150	150	150

Dielectric Voltage	耐电压	1 Minute at AC 300V
Insulation Resistance	绝缘电阻	100MΩ 1 Minute at DC 250V
Slide Noise	滑动杂音	≤68mV
Tracking Error	同步误差	≤±3dB at -40~0dB
ENDURANCE CHARACTERISTIC 耐久性能		
Sliding Life	滑动寿命	≥10,000 cycles

P.C.B. MOUNTING HOLE DETAIL (FOR SC/SA/SCA Series)

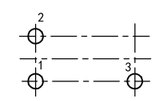

Z	CODE
	0

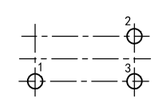

Z	CODE
	1

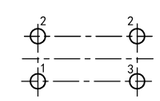

Z	CODE
	3

Note:In this catalog,if some parame ters lr drawings are different from the "Approval sheet",it's subject to the "Approval sheet".
注明:如说明书与承认书规格参数、图面有异，均以承认书为准。

SB4501 Series
SLIDE POTENTIOMETERS

MODEL 品名	DIMENSIONS 尺寸 UNIT:mm
SB4501FOA0X-HA1	 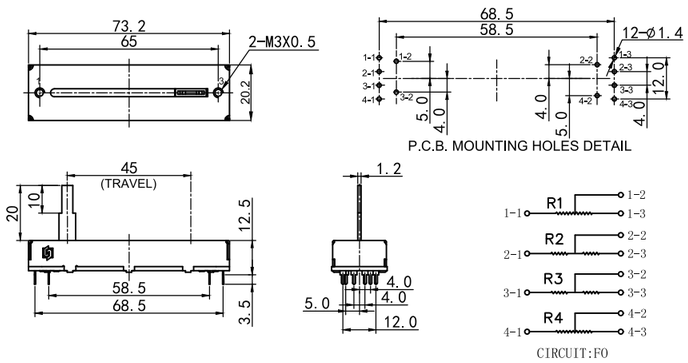

SB4501 SERIES COMMON SPECIFICATION

MECHANICAL CHARACTERISTIC 机械特性	
Total travel slide 全滑动行程	45mm±0.5mm
Sliding torque 滑动力	5~60gf
Lever Stop Strength 柄止档强度	≥5Kgf
Lever Wobble 滑柄偏摆量	Within (0.7x L/20)mm p-p L=Shaft Length
ELECTRICAL CHARACTERISTIC 电气特性	
Total Resistance Range 总阻及误差	1KΩ＜R＜1MΩ±20%;1KΩ≥R≥1MΩ±30%;
Resistance Taper 电阻特性曲线	Refer to Appendix I
Rating Power 额定功率	B taper 0.5W; Other taper 0.25 W
Max. Operating Voltage 最大工作电压	B taper DC 500 V; Other taper DC 300 V
Residual Resistance 残留电阻	Refer to Appendix I
Slide Noise 滑动杂音	≤68 mV
Insulation Resistance 绝缘电阻	100MΩ 1 minute at DC 250V
Dielectric Voltage 耐电压	1 minute at AC 250V
Tracking Error 同步误差	≤±3dB at -40~0dB
ENDURANCE CHARACTERISTIC 耐久特性	
Sliding Life 滑动寿命	10,000 cycles Min

Note:In this catalog,if some parame ters lr drawings are different from the "Approval sheet",it's subject to the "Approval sheet".
注明:如说明书与承认书规格参数、图面有异，均以承认书为准。

SK□□91 Series
SLIDE POTENTIOMETERS

MODEL 品名	DIMENSIONS 尺寸 UNIT:mm
SK4591GOA0A-HA1	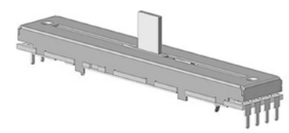 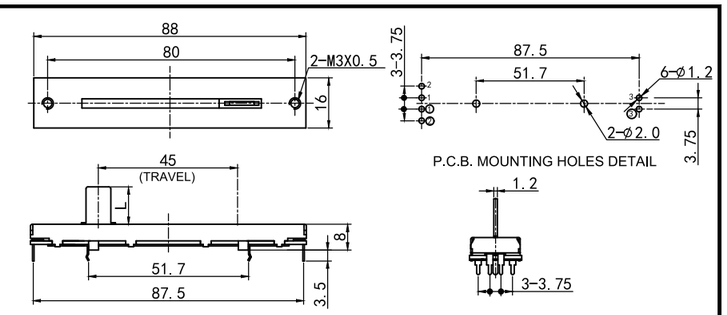
SK4591NOA0A-HA1	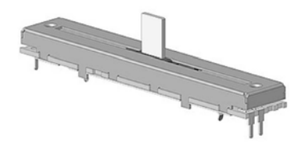 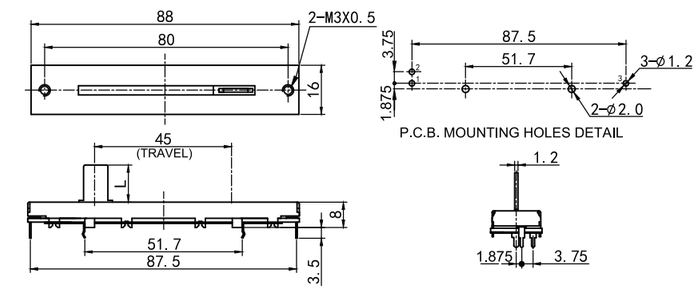
SK6091GOA0A-HA1	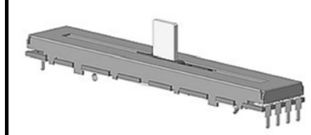 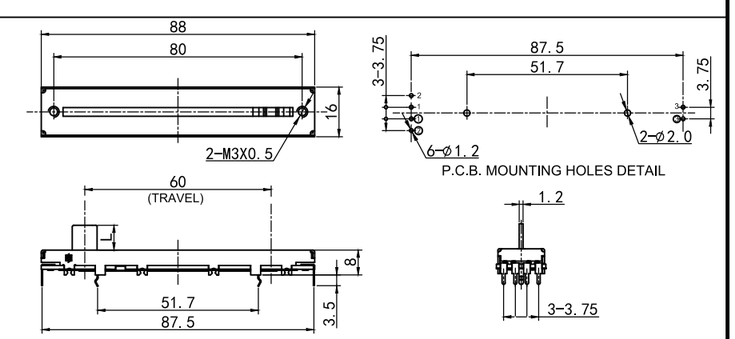
SK6091NOA0A-HA1	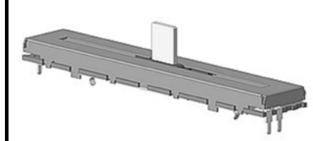 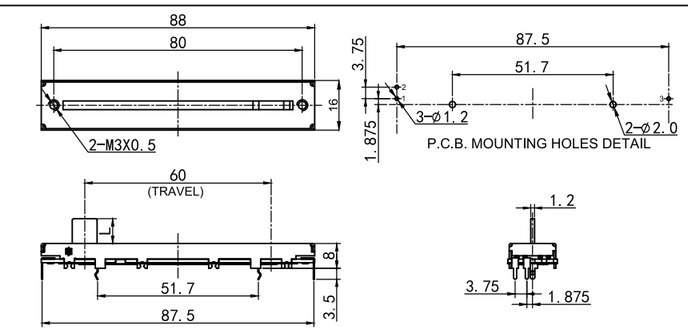

SK□□93 Series
SLIDE POTENTIOMETERS

MODEL 品名	DIMENSIONS 尺寸 UNIT:mm
SK4593GOA0X-HA1	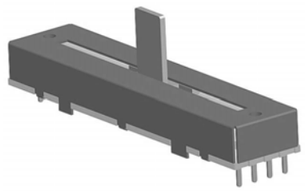 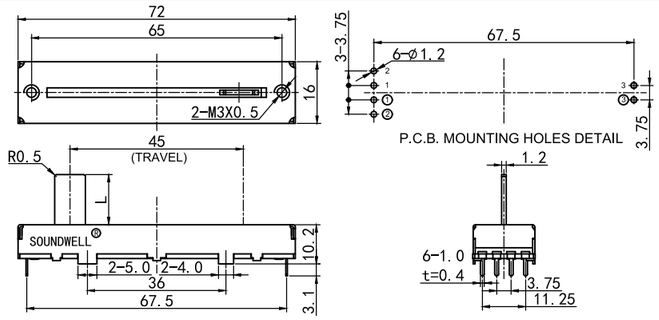
SK4593NOA0X-HA1	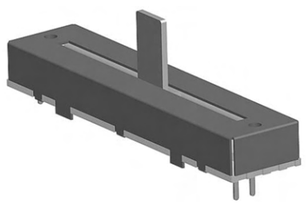 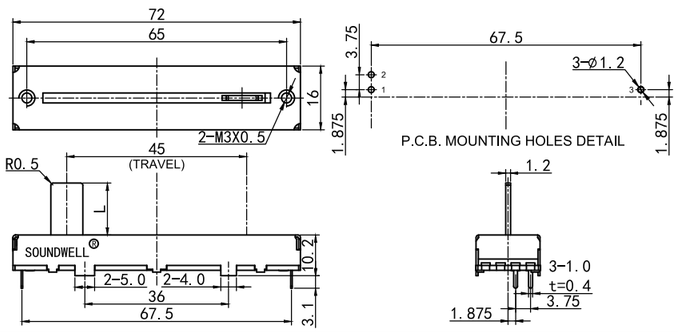
SK6093GOA0X-HA1	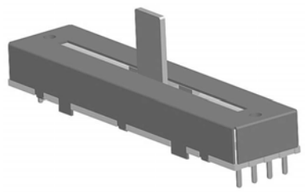 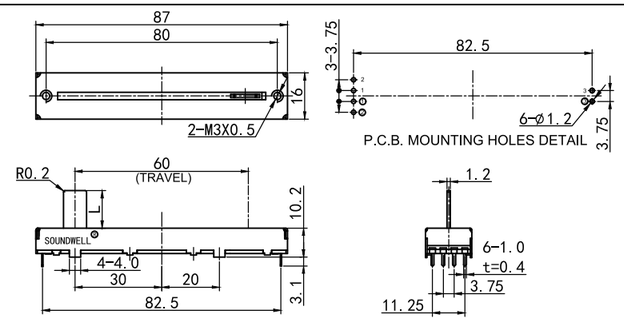
SK6093NOA0X-HA1	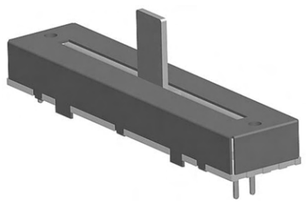 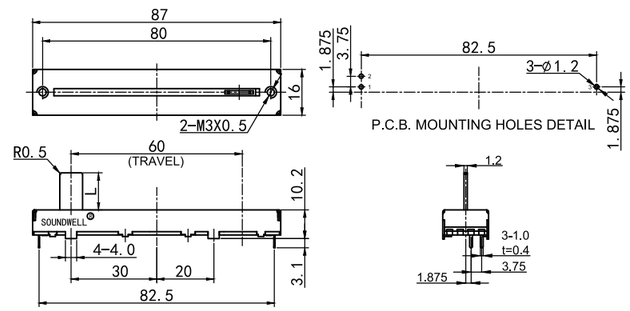

SKA191/10093 Series
SLIDE POTENTIOMETERS

MODEL 品名	DIMENSIONS 尺寸 UNIT:mm
SK10093GOA0X-HA1	 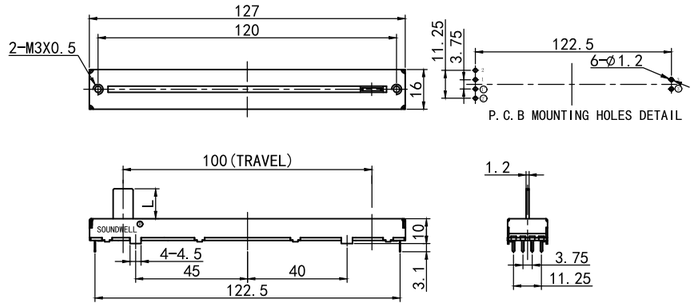
SK10093NOA0X-HA1	 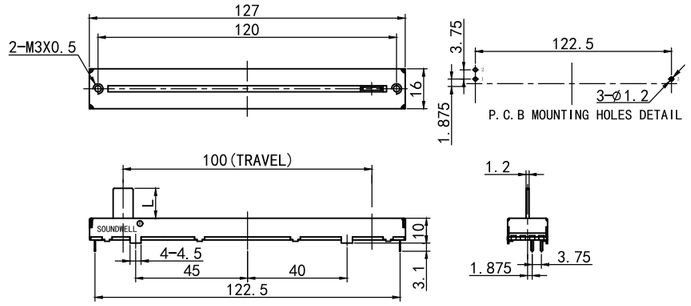
SKA191NOA0A-HA1	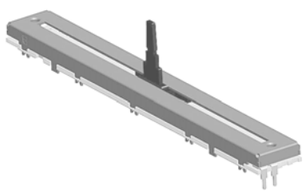 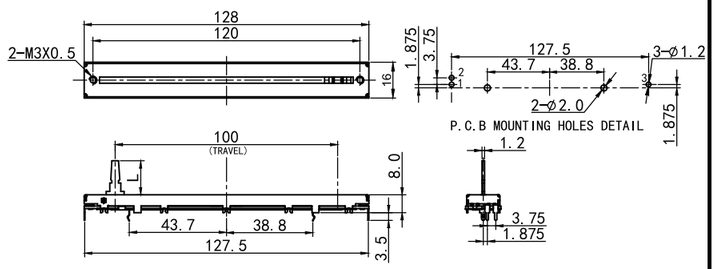
SKA191GOA0A-HA1	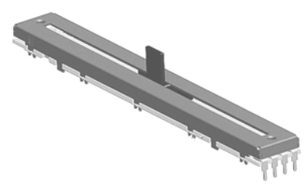 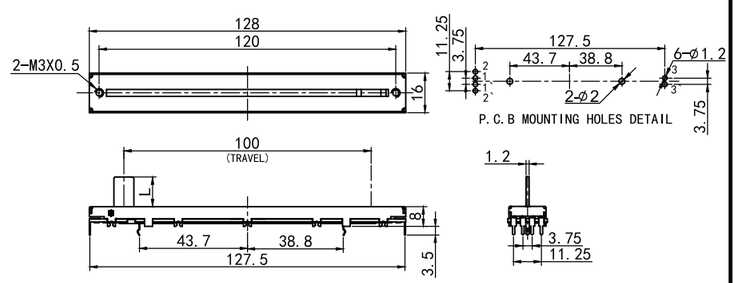

SK Series
SLIDE POTENTIOMETERS

SK SERIES COMMON SPECIFICATION		
MECHANICAL CHARACTERISTIC 机械特性		
Sliding Force 滑动力	5~110gf	
Lever Stop Strength 柄止档强度	≥5Kgf	
Lever Wobble 滑柄偏摆量	2×L/10mm Max.(L:Lever length both sides)	
ELECTRICAL CHARACTERISTIC 电气特性		
Total Resistance Range 总阻及误差	1KΩ≤R≤1MΩ,±20%;1KΩ≥R or R≥1MΩ,±30%;	
Resistance Taper 电阻特性曲线	Refer to Appendix I	
Rating Power 额定功率	B	0.2W
	Other Taper	0.1W
Rating Voltage 额定电压	B	DC 500V
	Other Taper	DC 300V
Dielectric Voltage 耐电压	1 Minute at AC 300V	
Insulation Resistance 绝缘电阻	100MΩ 1 Minute at DC 250V	
Slide Noise 滑动杂音	≤68mV	
Tracking Error 同步误差	≤±3dB at -40~0dB	
ENDURANCE CHARACTERISTIC 耐久性能		
Sliding Life 滑动寿命	SKXX91	SKXX93
	≥10,000 cycles	≥30,000 cycles

MODEL	SK SERIES			
LEVER TYPE		M16B	M16C	M17A
DIMENSIONS	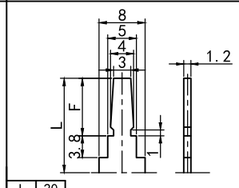 L 20; F 10	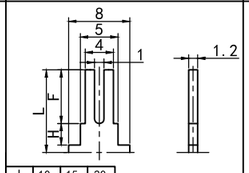 L 10 15 20; F 7 10 10; H 1.8 3.8 3.8	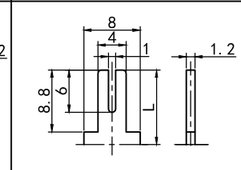 L 10 15 20	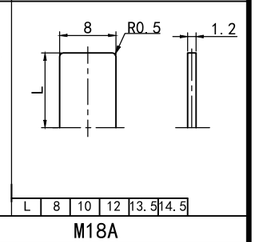 L 8 10 12 13.5 14.5
LEVER TYPE	M17B	M17C	M18A	
DIMENSIONS	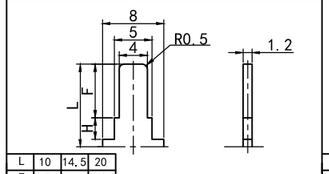 L 10 14.5 20; F 7 10 10; H 1.8 3.8 3.8	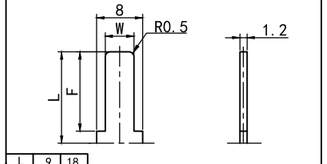 L 9 18; F 6.5 11; W 4 4.35	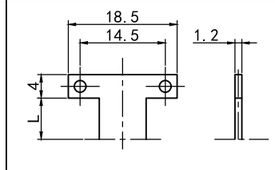 L 4.2 9.2	

SK SERIES CIRCUIT DIAGRAM

NO

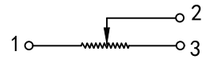

GO

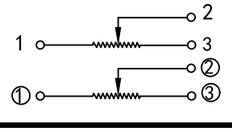

SM45 Series
MOTORIZED FADER

MODEL 品名 **DIMENSIONS 尺寸** **UNIT:mm**

SM4502NKA0A-HW1

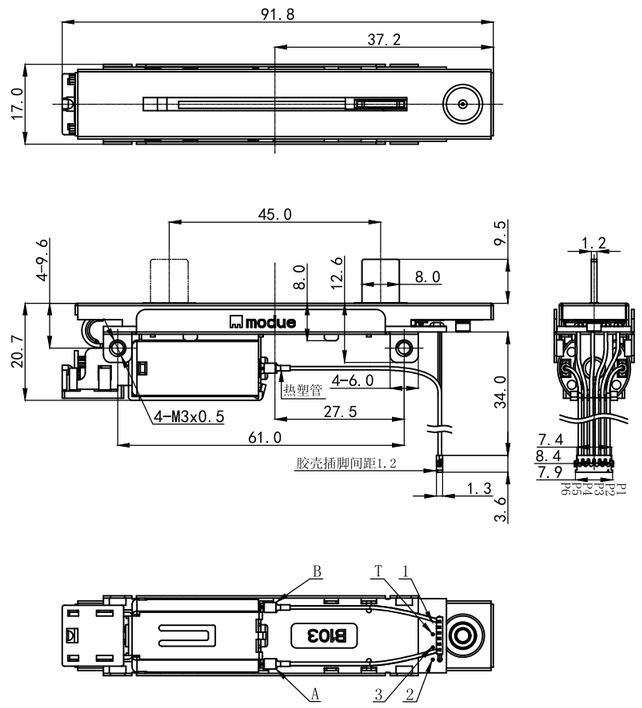

WIRING DIAGRAM

A —— 红线 —— P1
2 —— 红线 —— P2
3 —— 绿线 —— P3
T —— 黑线 —— P4
1 —— 白线 —— P5
B —— 黑线 —— P6

SERVO TRACK

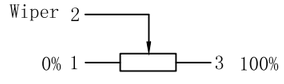

MOTOR

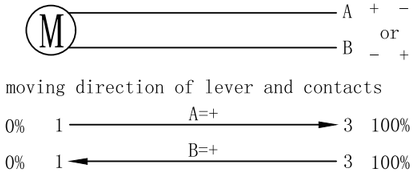

TOUCH SENSE TRACK

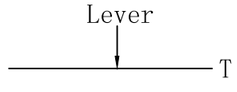

SM60 Series
MOTORIZED FADER

MODEL 品名 | **DIMENSIONS 尺寸** | **UNIT:mm**

SM6001NKA0X-HA1

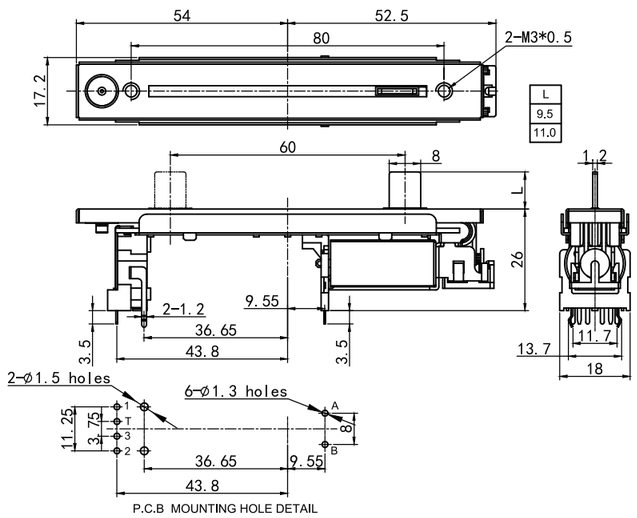

SM6002NKB0X-HA2

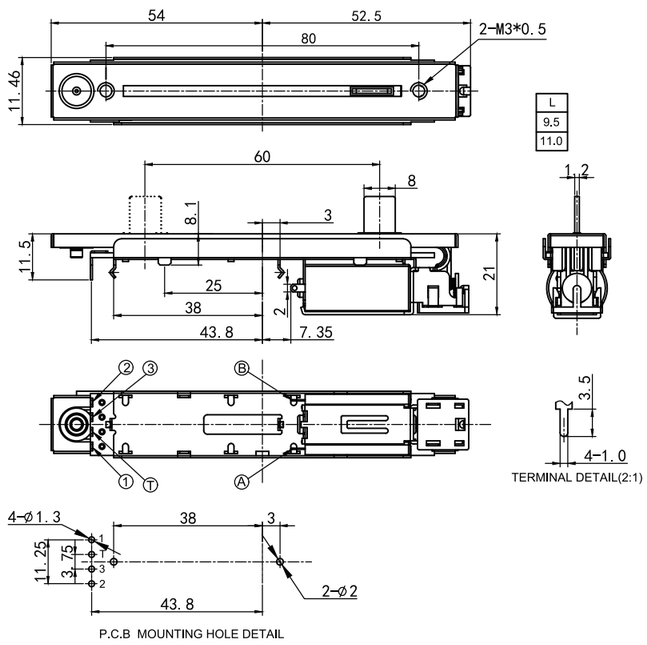

SM60/100 Series
MOTORIZED FADER

MODEL 品名 | **DIMENSIONS 尺寸** | **UNIT:mm**

SM6002NKA1X-HW1

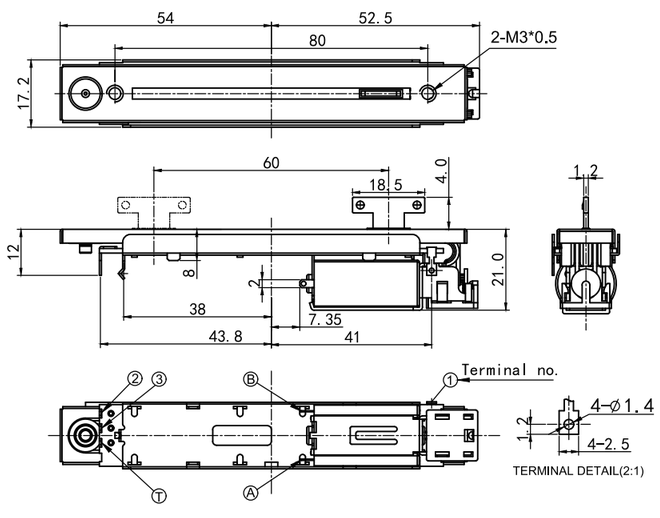

SM10001NKA0X-HA1

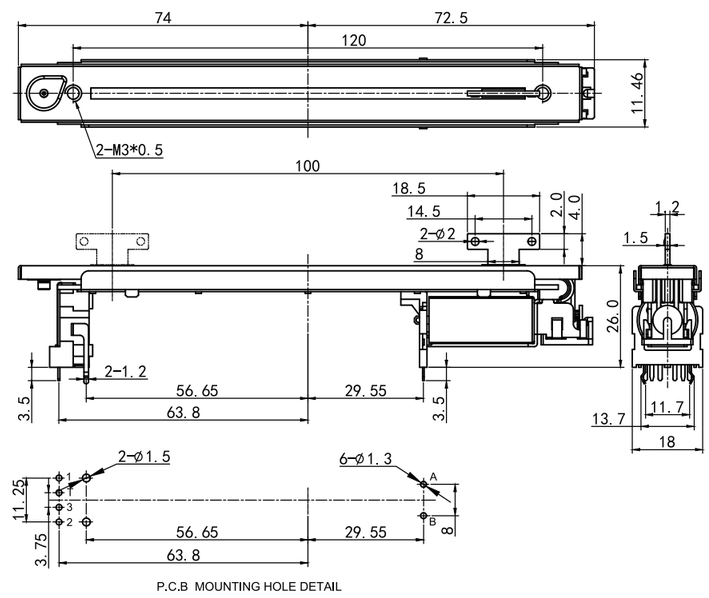

SM100 Series
MOTORIZED FADER

MODEL 品名 | **DIMENSIONS 尺寸** | **UNIT:mm**

SM10002NKB0X-HA2

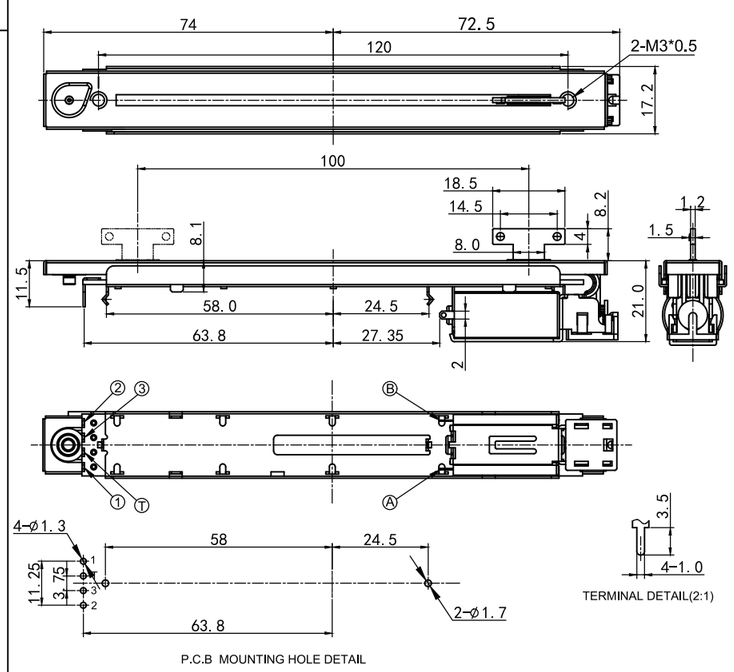

SM10002NKA1X-HW1

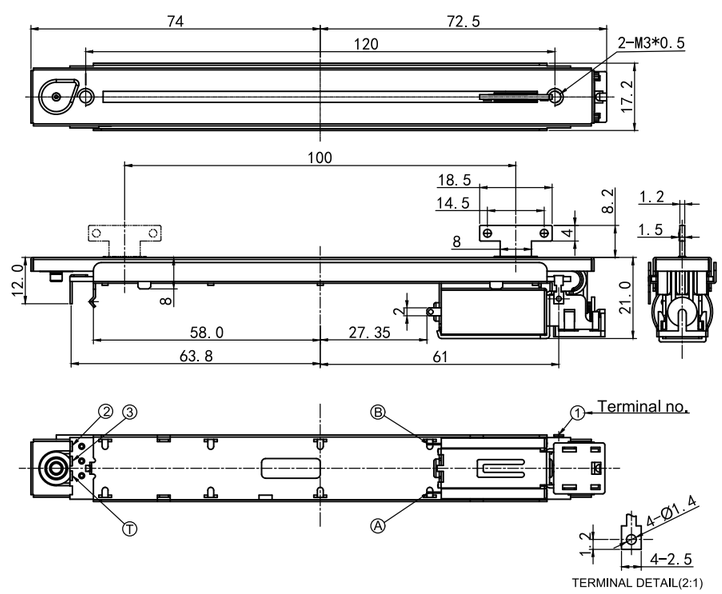

SM10004 Series
MOTORIZED FADER

MODEL 品名 | **DIMENSIONS 尺寸** | **UNIT:mm**

SM10004NKA1A-HA1

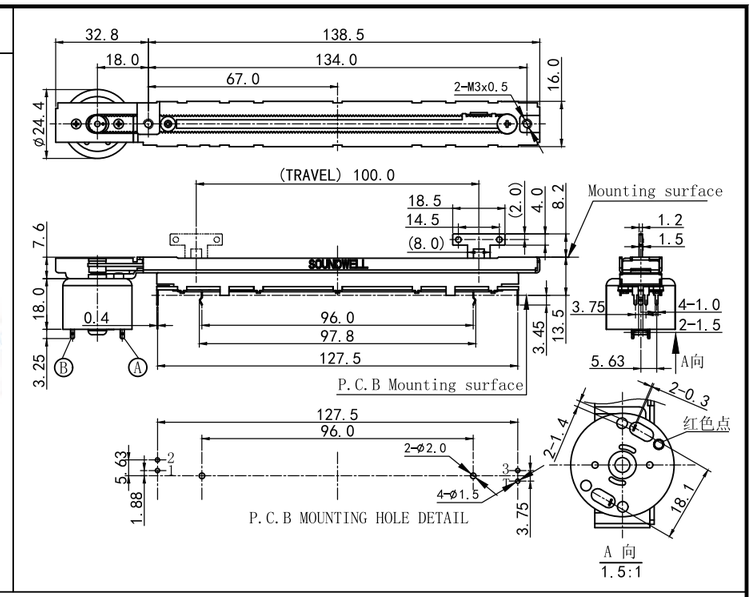

SM SERIES CIRCUIT DIAGRAM

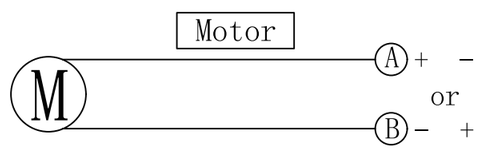

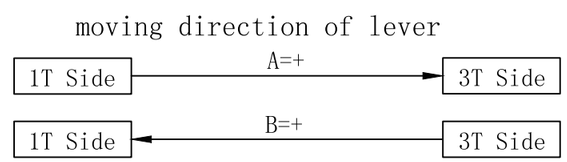

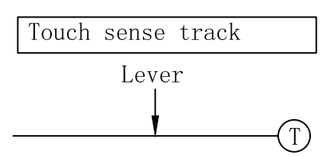

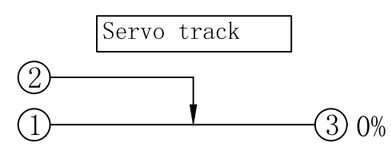

SM10005 Series
MOTORIZED FADER

MODEL 品名	DIMENSIONS 尺寸 UNIT:mm
SM10005NOA0A-HW1	

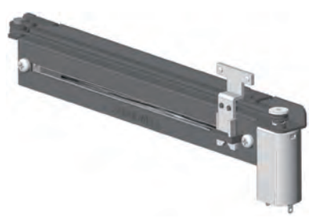

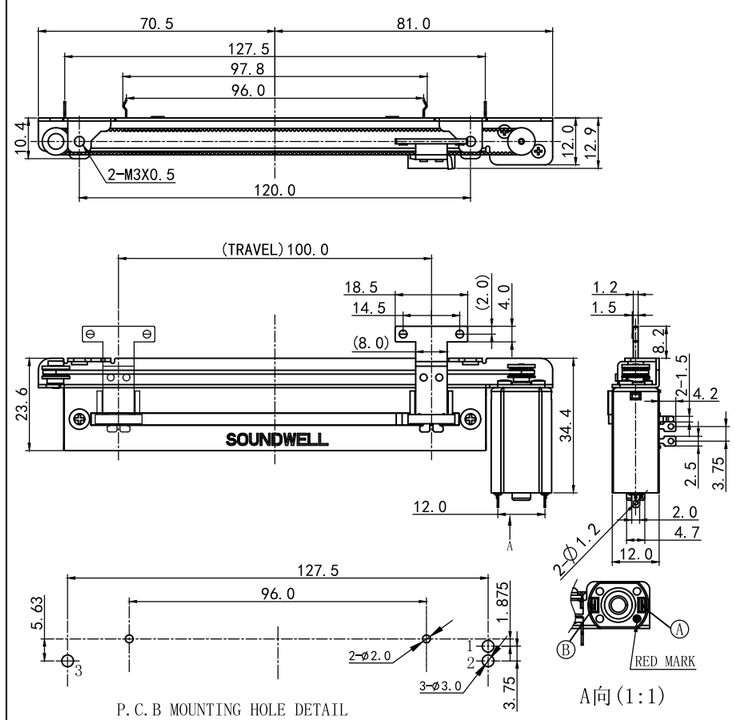

SM SERIES CIRCUIT DIAGRAM

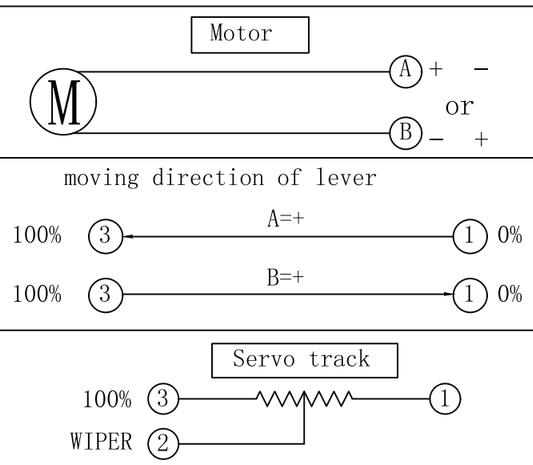

SM Series
MOTORIZED FADER

SM SERIES COMMON SPECIFICATION	
MECHANICAL CHARACTERISTIC 机械特性	
Sliding Force 滑动力	15~60gf
Lever Stop Strength 柄止档强度	≥5Kgf
Shaft Wobble (mm p-p) 轴摆动	1.6mm Max.
ELECTRICAL CHARACTERISTIC 电气特性	
Total Resistance Range 总阻及误差	10KΩ±20%;
Resistance Taper 电阻特性曲线	Refer to Appendix I
Rating Power 额定功率	0.5W
Max. Operating Voltage 最大工作电压	AC 200V
Insulation Resistance 绝缘电阻	100MΩ 1 Minute at DC 250V
Dielectric Voltage 耐电压	1 Minute at AC 250V
Motor Voltage 马达工作电压	DC 6~10V
Touch sense track 触摸感应	With （SM10005 Without）
ENDURANCE CHARACTERISTIC 耐久特性	
Sliding Life 滑动寿命	30,000 cycles Min

SM SERIES CIRCUIT DIAGRAM

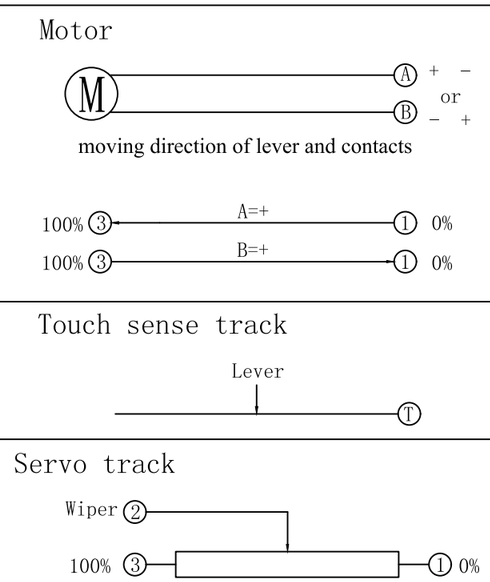

SV0601 Series
SLIDE POTENTIOMETER

MODEL 品名	DIMENSIONS 尺寸 UNIT:mm
SV0601NOAOX-WAO-000	 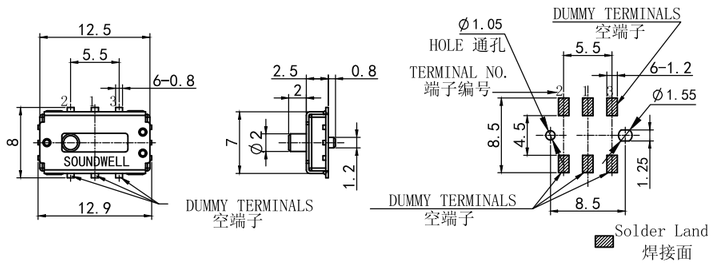 P.W.B MOUNTING DETAIL
SV0601GCAOX-WAO-000	 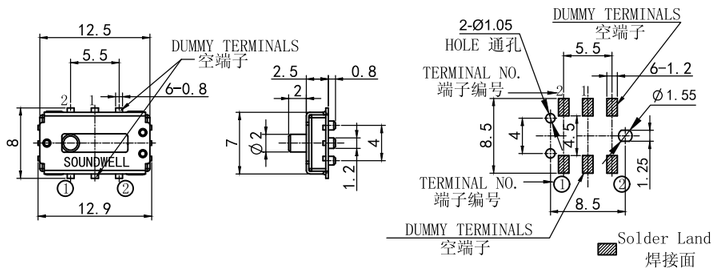 P.C.B MOUNTING HOLES DETAIL

SV0601 SERIES CIRCUIT DIAGRAM

NO

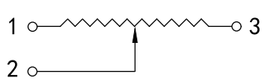

GC

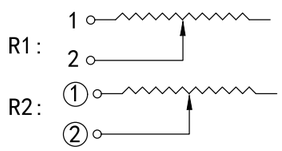

POTENTIOMETER SV0601

Total travel slide	滑动行程	5.5mm
Sliding Torque	滑动力矩	50gf.cm 以下
Operating Temperature	工作温度	-10°～70°
Rating Power	额定功率	0.025W
Rated Voltage	额定电压	5V DC
Insulation Resistance	绝缘阻抗	50MΩ 1 Minute at DC 100V
Dielectric Voltage	耐电压	1 Minute at AC 100V
Sliding Life	滑动寿命	10,000次 Min

Products Series Code Explanation
SENSOR

Resistive Sensor Series Code Explanation
电阻式传感器型号说明

(1) (2) (3) (4) (5) (6) (7) (8) (9)

RG 11 01 NO X 0 X - VH1 - 000

- Series 系列
- Size 外形尺寸
- Design Code 设计代号
- Circuit 电路
- Bushing 轴套
- Terminal position 端子配位
- Flow Code 电脑流水号
- Terminal 端子
- Bracket 支架

(1)&(2) ：Series & Size / 系列及外形尺寸。

SERIES 系列	EXPLANATION 说明	SIZE / 外形尺寸（mm/毫米）							
		10	11	15	16	18	25	27	46
RG	ROTARY RESISTIVE SENSOR 旋转型电阻式传感器	◉	◉	◉	◉	◉	◉	◉	◉

SERIES 系列	EXPLANATION 说明	TRAVEL /行程（mm/毫米）								
		8	12	32	45	47	85	87	120	130
SD	SLIDING RESISTIVE SENSOR 滑动型电阻式传感器	◉	◉	◉	◉	◉	◉	◉	◉	◉

(3)&(5)&(6)&(7)：Design Code & Bushing & Terminal position & Bracket Code are controlled by SOUNDWELL.
设计代号、轴套、端子配位及支架代号由本公司内部受控。

(4)：Circuit 电路.

(8)：Terminal :Controlled by SOUNDWELL.
端子：本公司内部受控。

(9)：Flow Code：（Resistance、material、shaft、Request of exceptive）controlled by SOUNDWELL.电脑流水号：（阻值、材质、轴心及特殊要求）为本公司内部受控。

Rotating Magnetic Sensor Series Code Explanation
旋转型磁感应式传感器型号说明

(1) (2) (3) (4) (5) (6) (7) (8) (9)

MR 11 01 NO X 0 X - HA1 - 000

(1)MR:Magnetic Sensor
磁感应式传感器

(2):Size / 外形尺寸。

(3)&(5)&(6)&(7)：Design Code & Bushing & Terminal position & Bracket Code are controlled by SOUNDWELL.
设计代号、轴套、端子配位及支架代号由本公司内部受控。

(4)：Circuit 电路.

RG10 Series
ROTARY RESISTIVE SENSOR

MODEL 品名	DIMENSIONS 尺寸	UNIT:mm

RG1001GOA0X-VA1

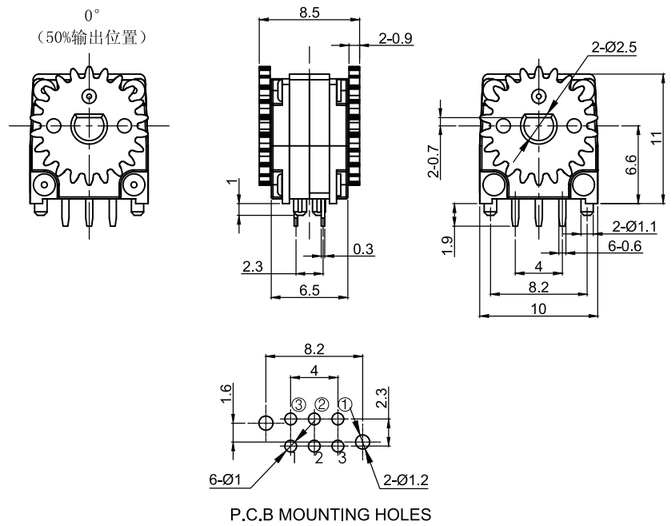

RG10 SERIES CIRCUIT DIAGRAM

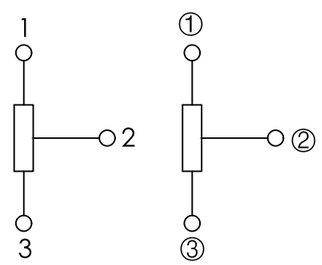

RESISTIVE SENSOR RG10

Total Rotational Aagle	旋转角度	360°
Effective electrical angle	电气有效可变角度	200°
Rotational Torque	回转扭矩	100gf.cm 以下
Operating Temperature	工作温度	-40°C～+85°C
Total Resistance & Tolerance	总阻及误差	4.7Ω±20%
Rated Voltage	额定电压	5V DC
Rating Power	额定功率	0.05W
Linearity error	线性误差	±2%
Rotational life	旋转寿命	50,000次 Min

RG11 Series
ROTARY RESISTIVE SENSOR

MODEL 品名	DIMENSIONS 尺寸	UNIT:mm

RG1101NOX0X-VH1

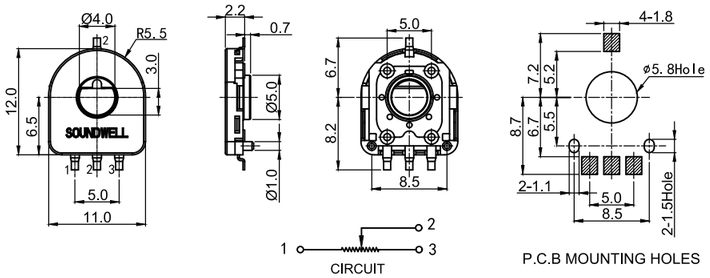

RG1102NOX0X-VH1

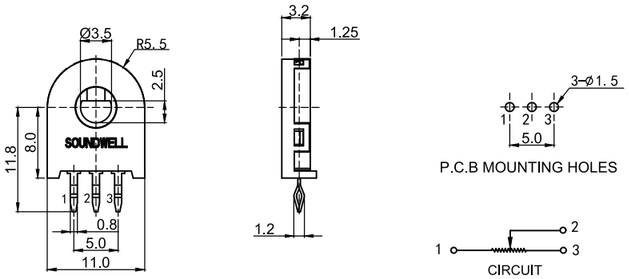

RG1103NOX0X-VH1

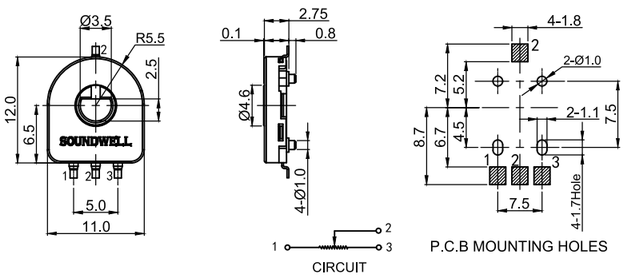

		RG1101	RG1102	RG1103
Total Rotational Aagle	旋转角度	360°		
Effective electrical angle	电气有效可变角度	333°,180°	280°	333°
Rotational Torque	回转扭矩	30gf.cm 以下		
Operating Temperature	工作温度	-40°C～+120°C	-40°C～+85°C	-40°C～+120°C
Total Resistance & Tolerance	总阻及误差	10KΩ±20%	47KΩ±20%	10KΩ±20%
Rated Voltage	额定电压	5V DC	10V DC	5V DC
Rating Power	额定功率	0.1W		
Linearity error	线性误差	±2%	/	±2%
Rotational life	旋转寿命	1,000,000次	30,000次	1,000,000次

RG15 /18Series
ROTARY RESISTIVE SENSOR

MODEL 品名	DIMENSIONS 尺寸	UNIT:mm

RG1501NOX0X-VA1

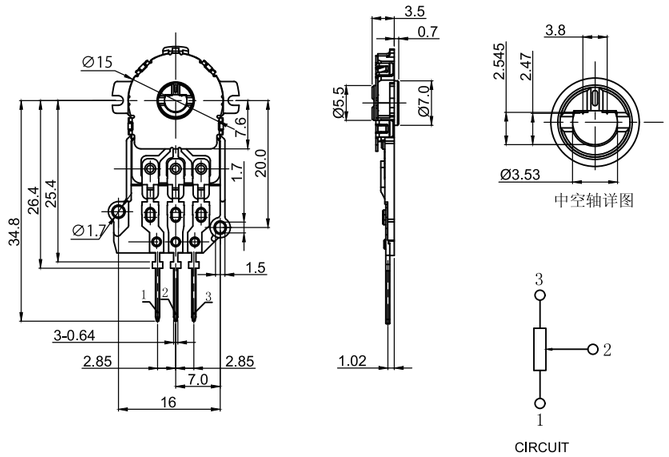

RG1801NOX0X-VA1

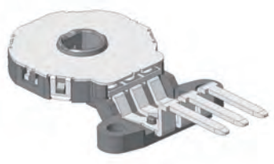

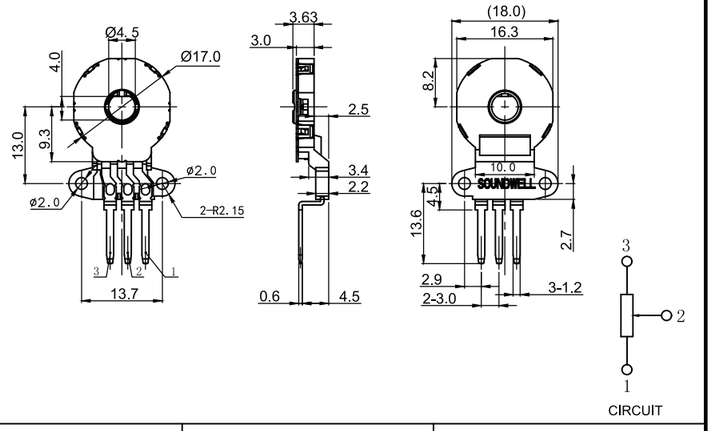

	RG15	RG18
Total Rotational Aagle 旋转角度	360°	360°
Effective electrical angle 电气有效可变角度	120°/180°/340°	182°
Rotational Torque 回转扭矩	100gf.cm 以下	150gf.cm 以下
Operating Temperature 工作温度	-40°C～+85°C	-40°C～+85° C
Total Resistance & Tolerance 总阻及误差	4.7KΩ±20%	4.7KΩ±20%
Rated Voltage 额定电压	5V DC	5V DC
Rating Power 额定功率	0.1W	0.1W
Linearity error 线性误差	±2%	±2%
Rotational life 旋转寿命	500,000次 Min	500,000次 Min

RG16 Series
ROTARY RESISTIVE SENSOR

MODEL 品名	DIMENSIONS 尺寸	UNIT:mm

RG1601NOX0X-VH1

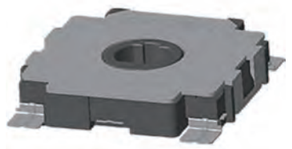

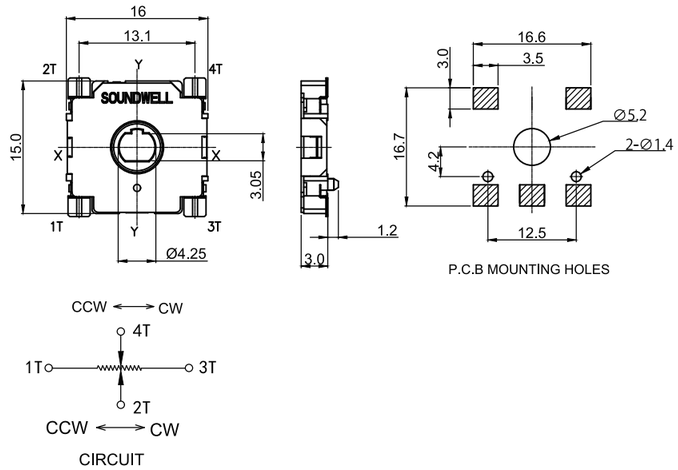

Resistance Taper 电阻特性曲线 ：

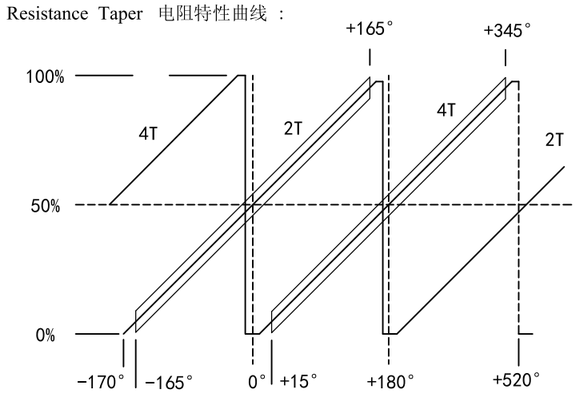

RG16 SERIES COMMON SPECIFICATION	
Total Rotational Aagle 旋转角度	360°
Effective electrical angle 电气有效可变角度	340°
Rotational Torque 旋转扭矩	50gf.cm Max
Operating Temperature 工作温度	-40°C～+120° C
Total Resistance & Tolerance 总阻及误差	10KΩ±20%
Rated Voltage 额定电压	5V DC
Rating Power 额定功率	0.1W
Linearity error 线性误差	±2% / ±3%
Rotational life 旋转寿命	100,000次 Min

RG22 Series
ROTARY RESISTIVE SENSOR

MODEL 品名	DIMENSIONS 尺寸	UNIT:mm

RG2201NOA0X-VA1

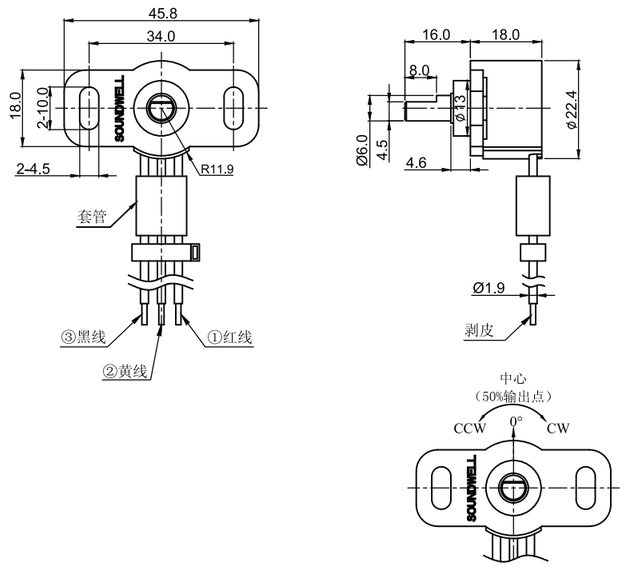

RG22 SERIES CIRCUIT DIAGRAM

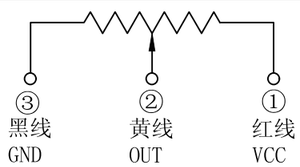

RG22 SERIES COMMON SPECIFICATION

MECHANICAL CHARACTERISTIC 机械特性		
Total Rotational Angle	旋转角度	360°
Rotational Torque	旋转力矩	200gf.cm Max
Push & Pull Strength	轴推拉强度	≥10Kgf
ELECTRICAL CHARACTERISTIC 电气特性		
Total Resistance Range	总阻及误差	5KΩ±20%
Electrical effective angle	电气有效角度	240°
Resistance Taper	电阻特性曲线	B曲线
Linearity error	线性误差	±3%
Rating Power	额定功率	0.3W
Rated Voltage	额定电压	5V DC
Insulation Resistance	绝缘阻抗	100MΩ 1 Minute DC 300V
Dielectric Voltage	耐电压	1 Minute AC 250V
ENDURANCE CHARACTERISTIC 耐久特性		
IP code	防护等级	IP65
Rotational Life	旋转寿命	1,000,000 cycles Min

RG25 Series
ROTARY RESISTIVE SENSOR

MODEL 品名	DIMENSIONS 尺寸	UNIT:mm

RG2501SGX0X-HA1

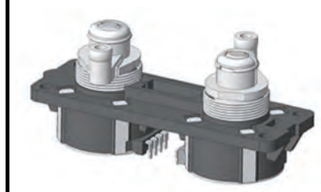

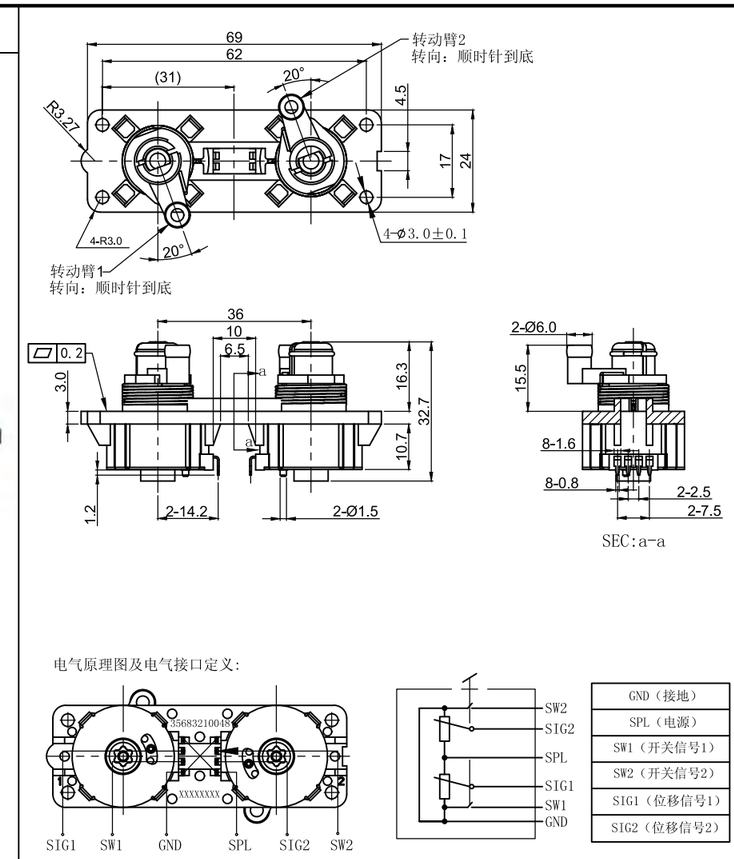

RG25 SERIES COMMON SPECIFICATION

Total Rotational Aagle	旋转角度	140°
Effective electrical angle	电气有效可变角度	36.35°
Rotational Torque	回转扭矩	200gf.cm Max
Operating Temperature	工作温度	-40°C～+85°C
Total Resistance & Tolerance	总阻及误差	2.6KΩ±20%
Rated Voltage	额定电压	5V DC
Rating Power	额定功率	0.1W
Linearity error	线性误差	±3%
Rotational life	旋转寿命	1,000,000次 Min

RG27 Series
ROTARY RESISTIVE SENSOR

MODEL 品名	DIMENSIONS 尺寸	UNIT:mm

RG2701NOA0X-WA1

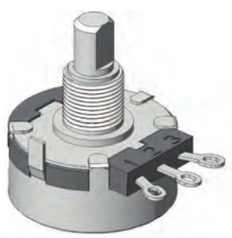

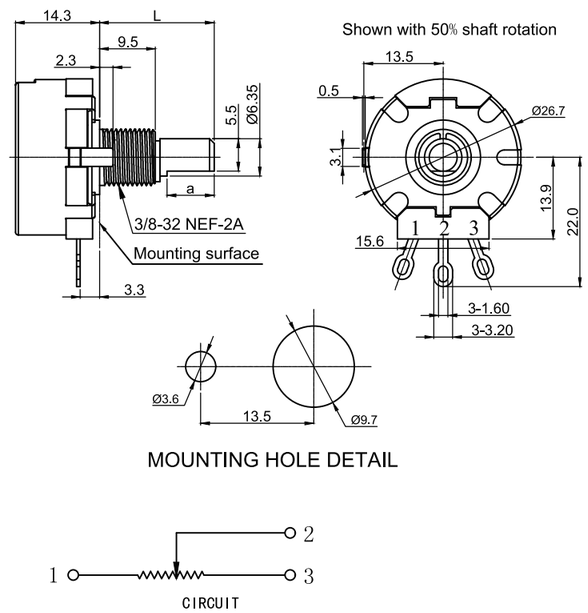

RG27 SERIES COMMON SPECIFICATION

MECHANICAL CHARACTERISTIC 机械特性		
Total Rotational Angle	旋转角度	312°
Rotational Torque	旋转力矩	70~280gf.cm(Without starting torque)
Shaft Stop Strength	轴止档强度	≥5Kgf.cm
Push & Pull Strength	轴推拉强度	≥14Kgf
ELECTRICAL CHARACTERISTIC 电气特性		
Total Resistance Range	总阻及误差	1KΩ＜R＜1MΩ,±20%;1KΩ≥R or R≥1MΩ,±30%;
Resistance Taper	电阻特性曲线	B曲线
Linearity error	线性误差	±5%
Rating Power	额定功率	≤2W
Max.Operating Voltage	最大工作电压	50V DC
Residual Resistance	残留电阻	≤20Ω
Insulation Resistance	绝缘阻抗	100MΩ 1 Minute DC 500V
Dielectric Voltage	耐电压	1 Minute AC 1000V
ENDURANCE CHARACTERISTIC 耐久特性		
Rotational Life	旋转寿命	25,000 cycles Min

RG46 Series
ROTARY RESISTIVE SENSOR

MODEL 品名	DIMENSIONS 尺寸	UNIT:mm

RG4601GMX0X-VA1

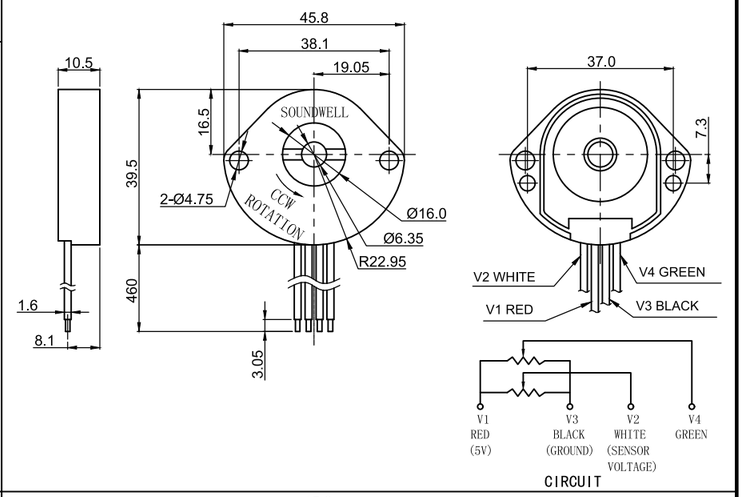

RG4602NOX0X-VA1

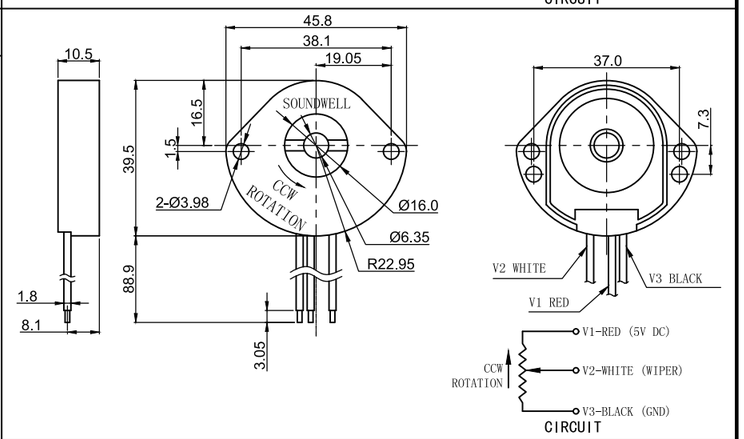

MODEL	品名	RG4601	RG4602
Total Rotational Aagle	旋转角度	106°	312.5°
Effective electrical angle	电气有效可变角度	94°	315°
Rotational Torque	回转扭矩	100～900gf.cm	
Operating Temperature	工作温度	-40°C～+85°C	
Total Resistance & Tolerance	总阻及误差	1KΩ±20%	
Rated Voltage	额定电压	10V DC	
Rating Power	额定功率	0.2W Max	
Linearity error	线性误差	±3%	
IP code	防护等级	IP65	
Rotational life	旋转寿命	1,000,000次 Min	

RA18 Series
ROTARY RESISTIVE SENSOR

MODEL 品名	DIMENSIONS 尺寸	UNIT:mm

RA1801NOA0A-HA1

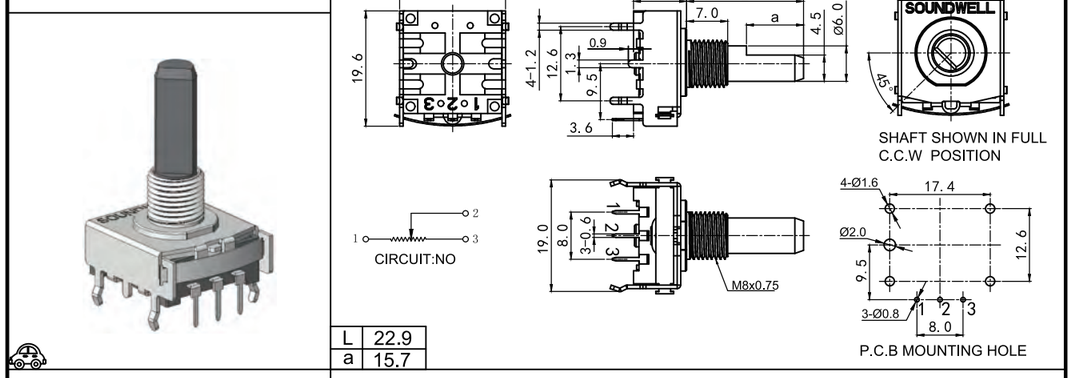

L	22.9
a	15.7

RA1803NOA0A-HA1

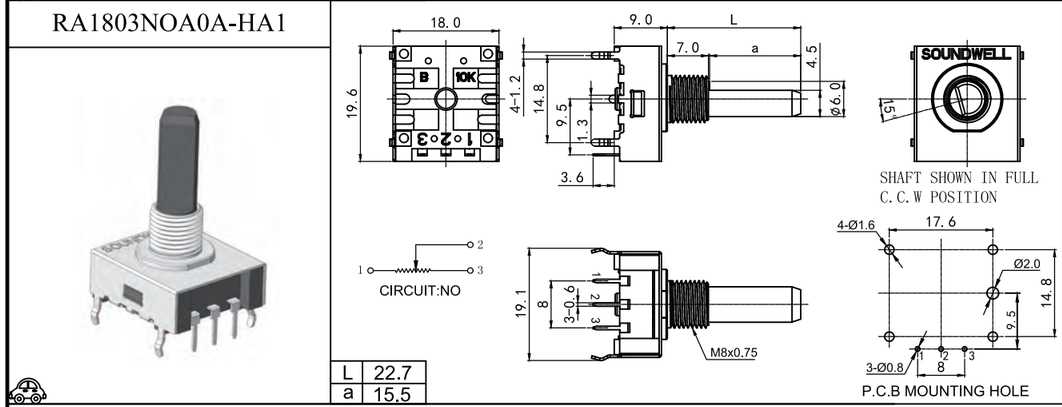

L	22.7
a	15.5

RA18 SERIES COMMON SPECIFICATION

MECHANICAL CHARACTERISTIC 机械特性		
Total Rotational Angle	旋转角度	270°、210°
Rotational Torque	旋转力矩	100~400gf.cm(Without starting torque)
Shaft Stop Strength	轴止档强度	≥8Kgf.cm
Push & Pull Strength	轴推拉强度	≥10Kgf
Number of Detents	定位数目	5档，8档，17档
ELECTRICAL CHARACTERISTIC 电气特性		
Total Resistance Range	总阻及误差	1KΩ＜R＜1MΩ,±20%;1KΩ≥R or R≥1MΩ,±30%;
Resistance Taper	电阻特性曲线	B曲线
Rating Power	额定功率	≤0.05W
Max.Operating Voltage	最大工作电压	50V AC / 20V DC
Rotational Noise	旋转杂音	≤100mV
Insulation Resistance	绝缘阻抗	100MΩ 1 Minute DC 250V
Dielectric Voltage	耐电压	1 Minute AC 300V
ENDURANCE CHARACTERISTIC 耐久特性		
Rotational Life	旋转寿命	30,000 cycles Min

QA3901 Series
ROTARY RESISTIVE SENSOR

MODEL 品名	DIMENSIONS 尺寸	UNIT:mm

QA3901NOX0A-HA1

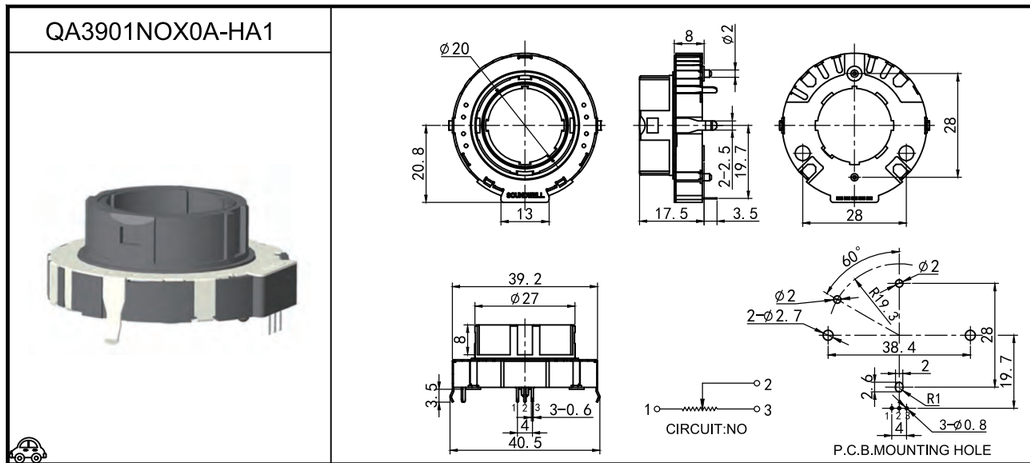

QA3901NJX0A-HA1

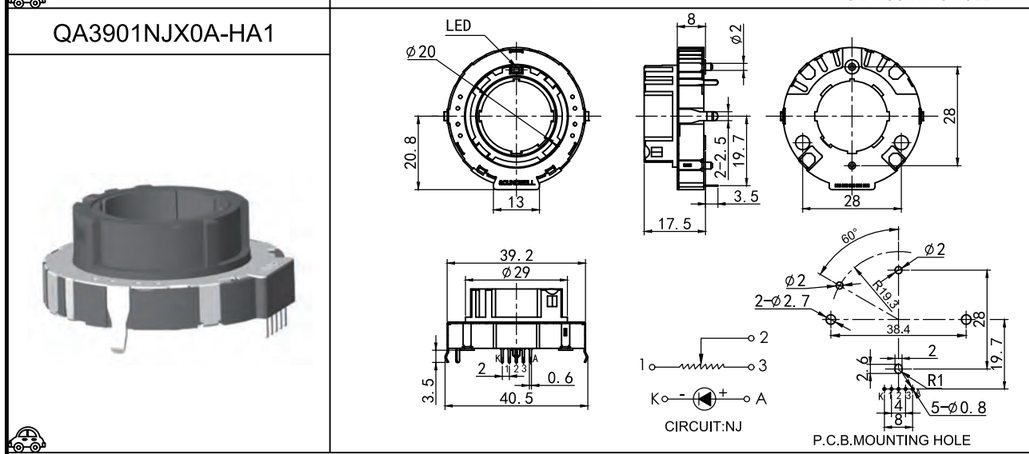

QA39 SERIES COMMON SPECIFICATION

MECHANICAL CHARACTERISTIC 机械特性																			
Number of detents	定位数目	5档			6档		8档			9档			11档	15档			17档	18档	29档
Total mechanical rotation	全回转角度	180°	240°	270°	288°	190°	320°	180°	225°	230°	180°	270°	288°	270°	180°	224°	276°	180°	220°	210°	270°
Rotational torque	旋转力矩	300±100gf.cm																			
Shaft stopper strength	轴止档强度	≥8Kgf.cm																			
ELECTRICAL CHARACTERISTIC 电气特性																					
Total Resistance Range	总阻及误差	10K±20%																			
Resistance Taper	电阻特性曲线	0B																			
Rating Power	额定功率	≤0.125W																			
Insulation Resistance	绝缘电阻	50MΩ 1 Minute at DC 250V																			
Dielectric Voltage	耐电压	1 Minute at AC 250V																			
Rotational Life	旋转寿命	50,000 cycles Min																			

QA3902/48 Series
ROTARY RESISTIVE SENSOR

MODEL 品名 | **DIMENSIONS 尺寸** | UNIT:mm

QA3902NJX0A-HA2

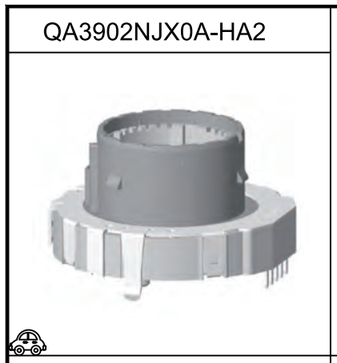

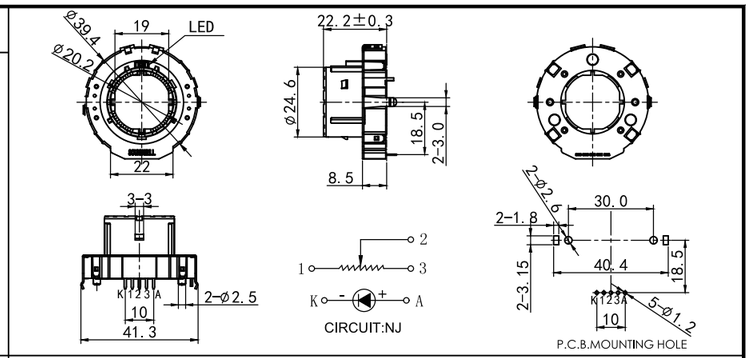

QA4801NJX0A-HA1

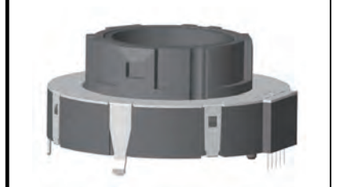

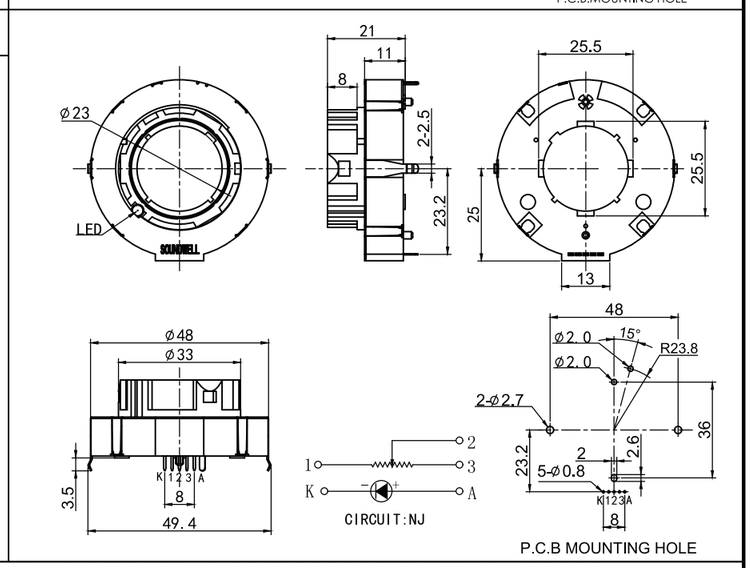

QA39/48 SERIES COMMON SPECIFICATION

MECHANICAL CHARACTERISTIC 机械特性	QA3902								QA48		
Number of detents 定位数目	5档		6档	7档	8档	9档	17档		9档	16档	17档
Total mechanical rotation 全回转角度	180°	240°	180°	180°	225°	240°	220°	240°	180°		
Rotational torque 旋转力矩	300±100gf.cm								500±200gf.cm		
Shaft stopper strength 轴止档强度	≥8Kgf.cm								≥6Kgf.cm		
ELECTRICAL CHARACTERISTIC 电气特性											
Total Resistance Range 总阻及误差	10KΩ±20%								10KΩ±20%		
Resistance Taper 电阻特性曲线	0B								0B		
Rating Power 额定功率	≤0.125W								≤0.125W		
Insulation Resistance 绝缘电阻	50MΩ 1 Minute at DC 250V								50MΩ 1 Minute at DC 250V		
Dielectric Voltage 耐电压	1 Minute at AC 250V								1 Minute at AC 250V		
Rotational Life 旋转寿命	50,000 cycles Min								50,000 cycles Min		

QA45 Series
ROTARY RESISTIVE SENSOR

MODEL 品名 | DIMENSIONS 尺寸 | UNIT:mm

QA4501NJX0A-HA1-000

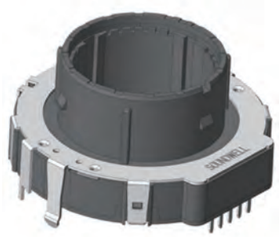

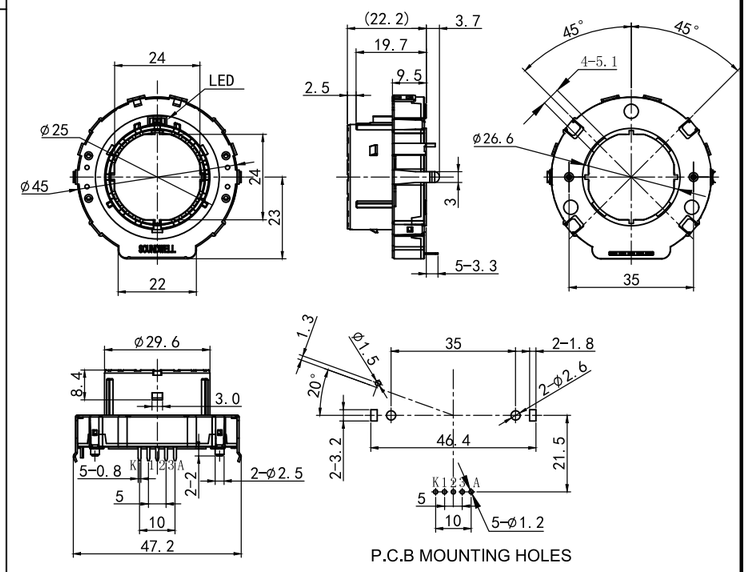

QA45 SERIES CIRCUIT DIAGRAM

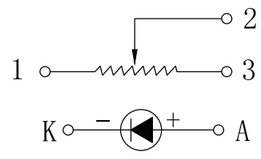

POTENTIOMETER QA45

Total mechanical rotation	全回转角度	240°
Number of detents	定位点数	17
Rotational Torque	旋转力矩	240～560gf.cm
Operating Temperature	工作温度	-40°C～85°C
Rating Power	额定功率	0.05W
Insulation Resistance	绝缘阻抗	10MΩ 1 Minute at DC 50V
Dielectric Voltage	耐电压	1 Minute at AC 50V
Rotational Life	旋转寿命	30,000次 Min

SD08/18 Series
SLIDE POTENTIOMETER

MODEL 品名	DIMENSIONS 尺寸	UNIT:mm

SD0801NOA0X-VA1

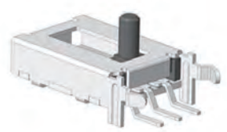

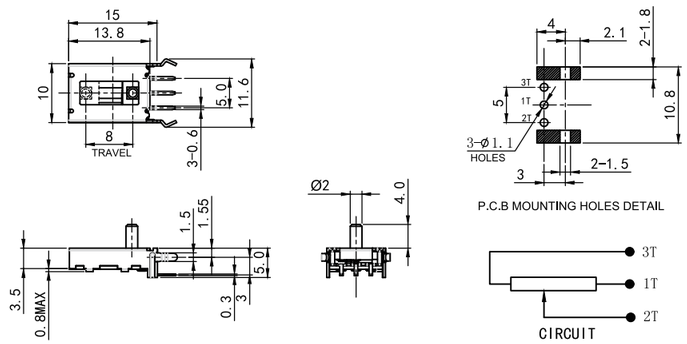

SD1801NOA0X-HA1

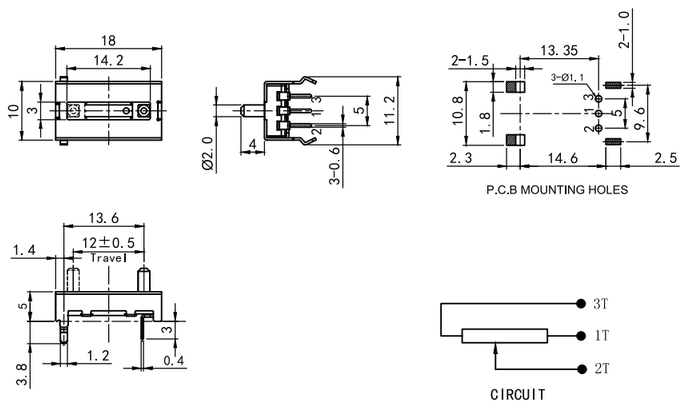

MODEL	品名	SD08	SD18
Total travel slide	滑动行程	8mm	12mm
Sliding Force	滑动力	100gf Max	
Operating Temperature	工作温度	-40°C ~ +85° C	
Total Resistance & Tolerance	总阻及误差	10KΩ±20%	
Rated Voltage	额定电压	DC 12V	
Rating Power	额定功率	0.1W	
Linearity error	线性误差	±2%	
Sliding Life	滑动寿命	30,000次 Min	

SD32/47 Series
SLIDE RESISTIVE SENSOR

MODEL 品名	DIMENSIONS 尺寸	UNIT:mm

SD3201NOA0X-HA1

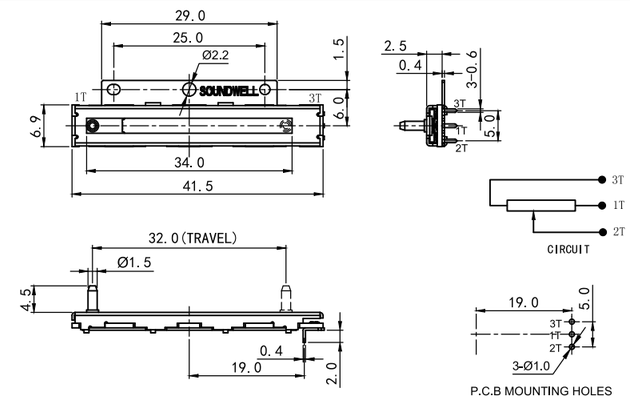

SD4701NOA0X-HA☒

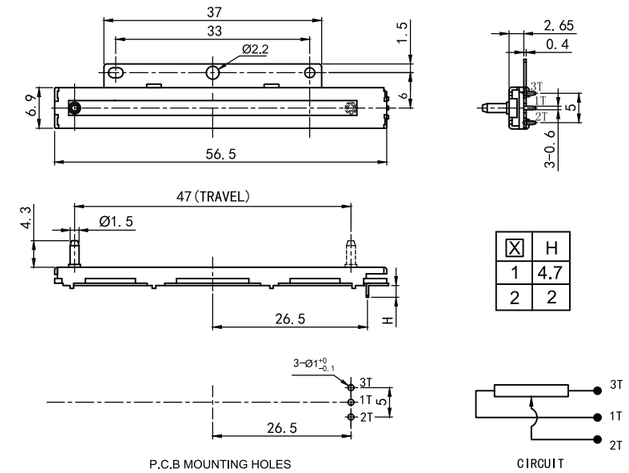

☒	H
1	4.7
2	2

MODEL	品名	SD32	SD47
Total travel slide	滑动行程	32mm	47mm
Sliding Force	滑动力	50gf Max	
Operating Temperature	工作温度	-40°C ~ +85° C	
Total Resistance & Tolerance	总阻及误差	10KΩ±20%	
Rated Voltage	额定电压	5V DC	
Rating Power	额定功率	0.05W	
Linearity error	线性误差	±1%	
Sliding Life	滑动寿命	200,000次 Min	

SD45/85 Series
SLIDE RESISTIVE SENSOR

MODEL 品名	DIMENSIONS 尺寸	UNIT:mm

SD4501NOX0X-HA1

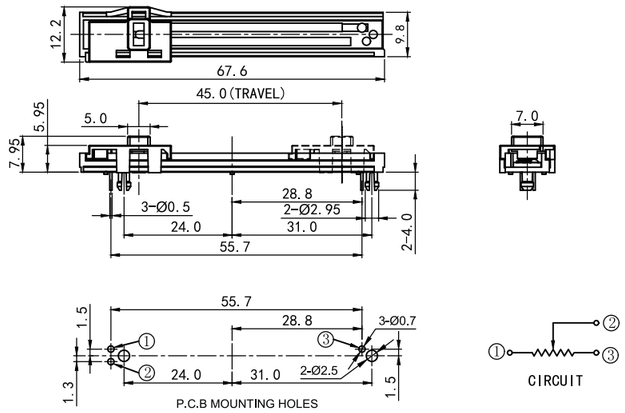

SD8501NOX0X-HA1

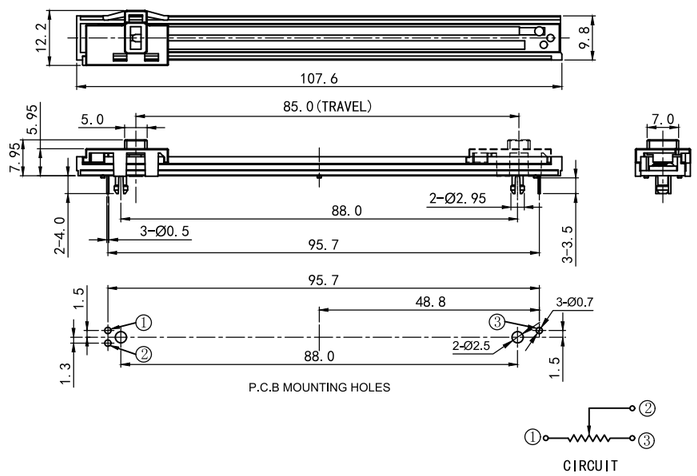

MODEL	品名	SD45	SD85
Total travel slide	滑动行程	45mm	85mm
Sliding Force	滑动力	100gf Max	
Operating Temperature	工作温度	-40°C ~ +85° C	
Total Resistance & Tolerance	总阻及误差	10KΩ±20%	
Rated Voltage	额定电压	5V DC	
Rating Power	额定功率	0.05W	
Linearity error	线性误差	±1%	
Sliding Life	滑动寿命	50,000次 Min	

SD87 Series
SLIDE RESISTIVE SENSOR

MODEL 品名	DIMENSIONS 尺寸	UNIT:mm

SD8701NOA0X-HA1

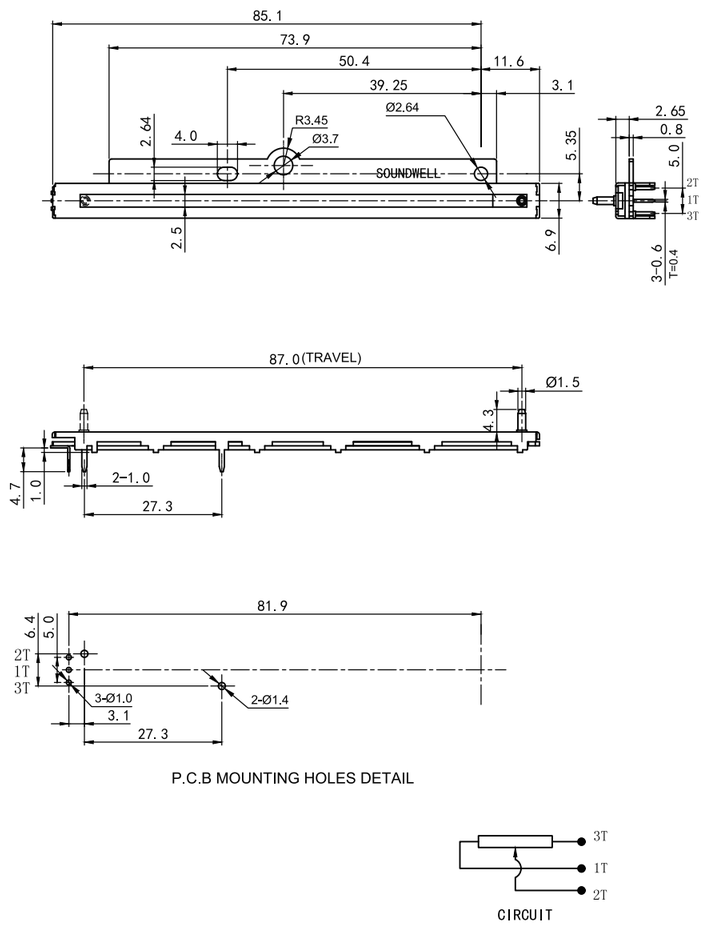

Total travel slide	滑动行程	87mm
Sliding Force	滑动力	50gf Max
Operating Temperature	工作温度	-40°C ~ +85° C
Total Resistance & Tolerance	总阻及误差	10KΩ±20%
Rated Voltage	额定电压	5V DC
Rating Power	额定功率	0.1W
Linearity error	线性误差	±1%
Sliding Life	滑动寿命	100,000次 Min

SD120/130 Series
SLIDE RESISTIVE SENSOR

MODEL 品名	DIMENSIONS 尺寸	UNIT:mm

SD12001NOA0A-HA1

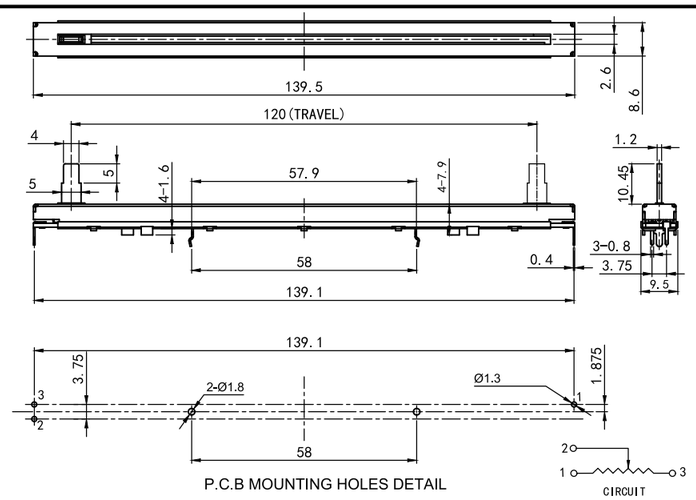

SD13001NOA0A-HA1

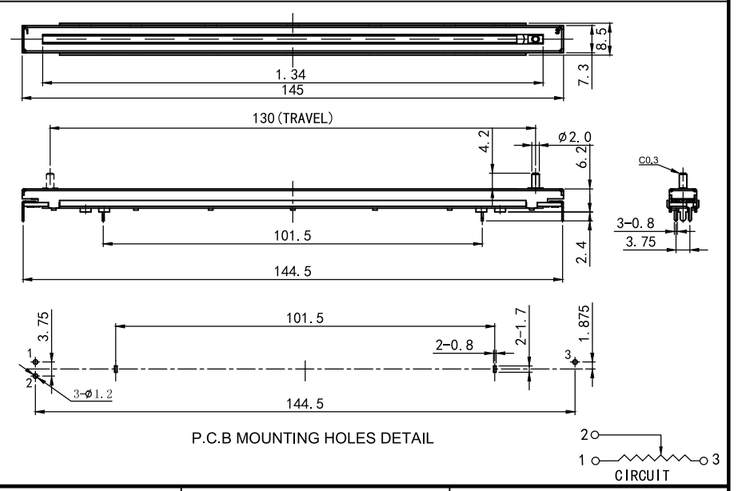

MODEL	品名	SD120	SD130
Total travel slide	滑动行程	120mm	130mm
Sliding Force	滑动力	50gf Max	
Operating Temperature	工作温度	-10°C ~ +70° C	
Total Resistance & Tolerance	总阻及误差	10KΩ±20%	
Rated Voltage	额定电压	5V DC	
Rating Power	额定功率	0.1W	
Linearity error	线性误差	±2%	次1.2%
Sliding Life	滑动寿命	500,000次 Min	100,000次 Min

MR Series
Magnetic Sensitive Potentiometers

MODEL 品名	DIMENSIONS 尺寸	UNIT:mm

MR11

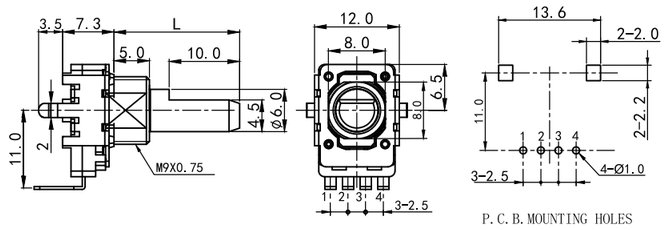

MR20

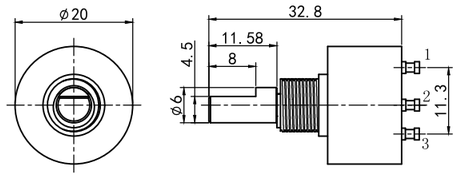

NO.	端子名
1	Vcc
2	OUT
3	GND

MR22

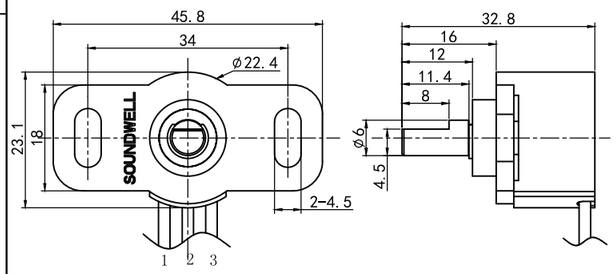

NO.	端子名
1	Vcc
2	OUT
3	GND

MR42

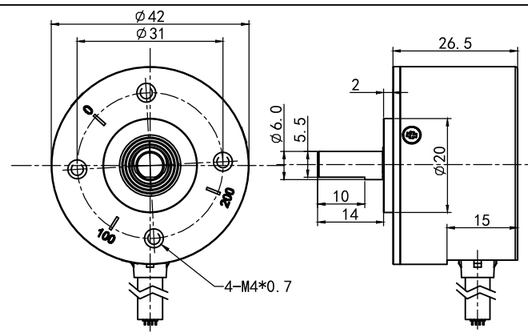

NO.	线色	端子名
1	棕	电源(+Vcc)
2	黑	GND
3	绿	输出信号1
4	黄	输出信号2

MR Series
Magnetic Sensitive Potentiometers

Resolution and Output signal				
SERIES 系列	Angle 角度	OUTPUT PHASE 输出波形	Output Wave 输出波形组数	Linearity 线性精度
MR11	0~300° A、B点可任意设置	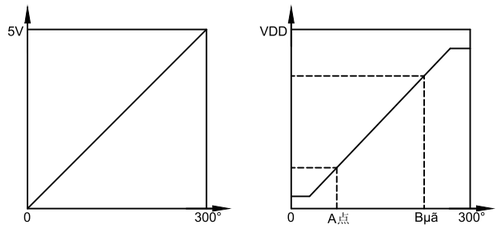	1组或2组	<1.0%
MR20	0~360° A、B点可任意设	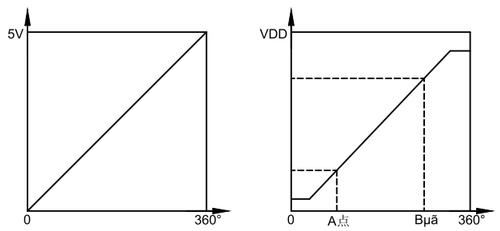	1组或2组	<0.5%
MR22	0~360° A、B点可任意设	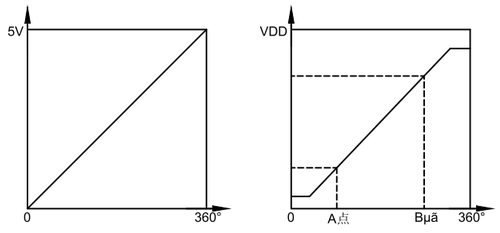	1组或2组	<0.5%
MR42	0~360° A、B、C、D点可任意设置	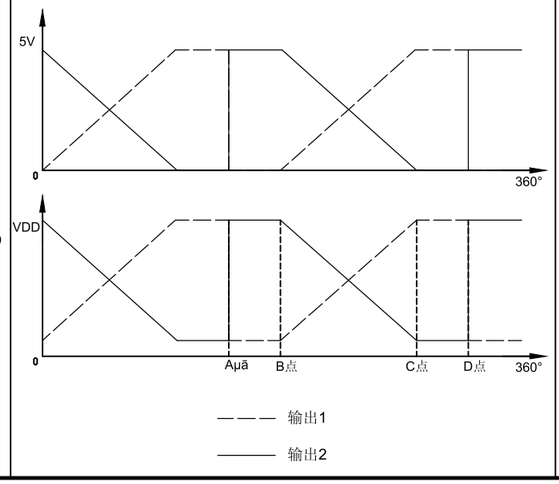	2组	<0.5%

Products Series Code Explanations
ROTARY ROUTE SWITCH

Rotary Route Switch Series Code Explanation
多路开关型号说明

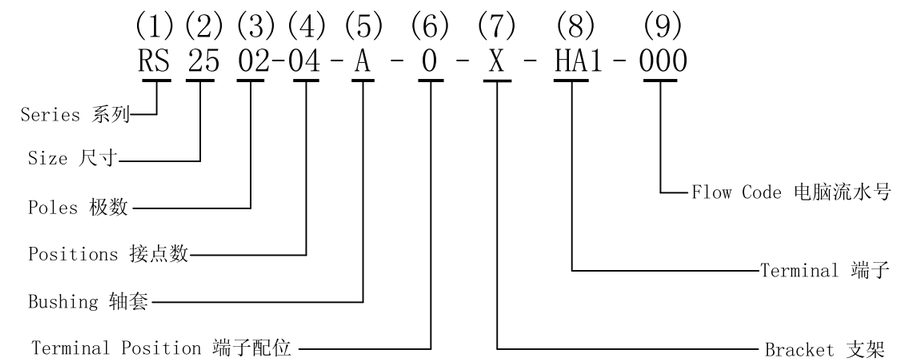

(1)&(2): Series & Size / 系列及尺寸。

SERIES 系列	EXPLANATION 型号说明	SIZE / 尺寸（mm/毫米）
		12 17 24 25 26
RS	ROTARY ROUTE SWITCH 多路开关	◉

(3): Poles : From 1 to 6 Terminals。极数：可提供 1 至 6 个端子。

(4): Positions：From 1 to 12 Positions。接点数：可提供 1 至 12 个接点。

(5)&(6)&(7):Bushing & Teminal Position & Bracket are Controlled by SOUNDWELL。
轴套、端子配位、支架受本公司内部受控。

(8): Terminal：端子。

CODE / 代号	HA	HW
Terminal Type 端子类别	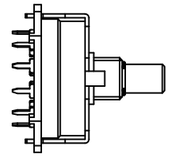	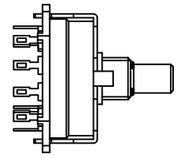
CODE / 代号	PA	PW
Terminal Type 端子类别	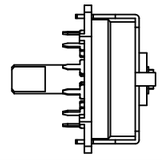	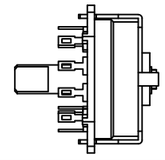

(9): Flow Code :（Teminal Position、Rotation Angle、shaft Orientation and Request of exceptive）controlled by SOUNDWELL。
电脑流水号:（端子安装角度、旋转角度、轴芯方位及特殊要求）:由本公司内部受控。

Products Series Code Explanation

ROTARY ROUTE SWITCH

Terminals Installation Angle / 端子安装角度：

(i) 30° / (ii) 15°

(i):The First Inner Terminals Angle C.C.W / 逆时针第一个内端子角度：(Refer to fig A. / 参考图A)

(ii): The First Outer Terminals Angle C.C.W / 逆时针第一个外端子角度：(Refer to fig B. / 参考图B)

Fig A

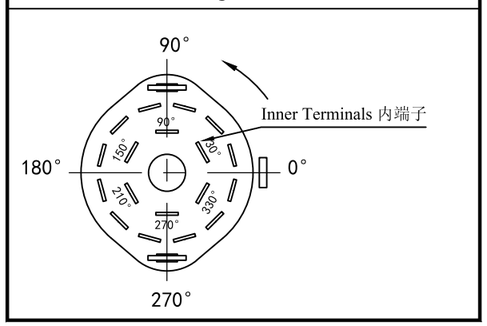

Fig B

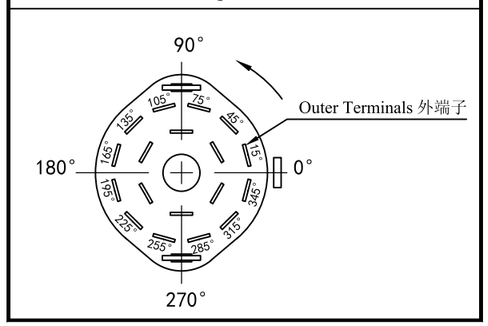

Rotation Angle: Refer to following equation / 旋转角度:参考以下公式。

Rotation Angle = (No. of Position-1) x 30° or 360°

旋转角度=(接点数-1) x 30° 或 360°

Shaft Orientation / 轴心方位：Standard is 0 Type / 标准为0型。

CODE 代号	0	1	2	3
Shaft shown in full C.C.W position 轴心方位 (逆时针位置)	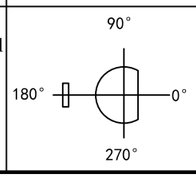	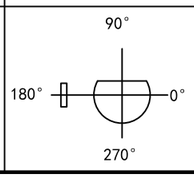	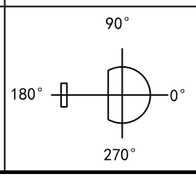	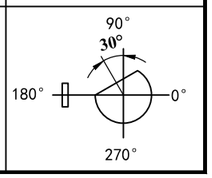

RS06/RS1002/1004 Series

ROTARY ROUTE SWITCH

MODEL 品名	DIMENSIONS 尺寸	UNIT:mm

RS0601SWA0X-VH1

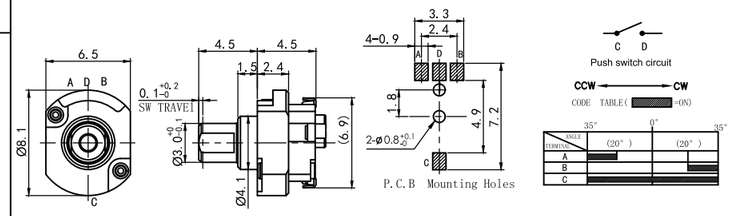

RS1002SWA0X-VA1

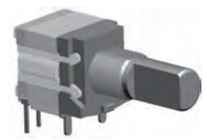

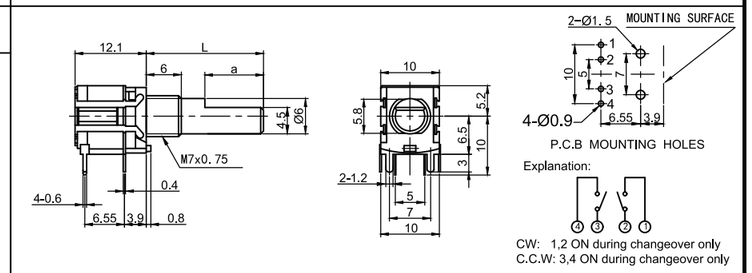

RS1002SCC0X-VA1

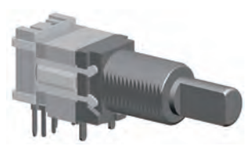

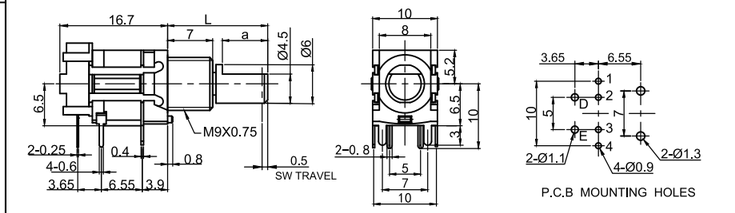

RS1004SWA0X-HA1

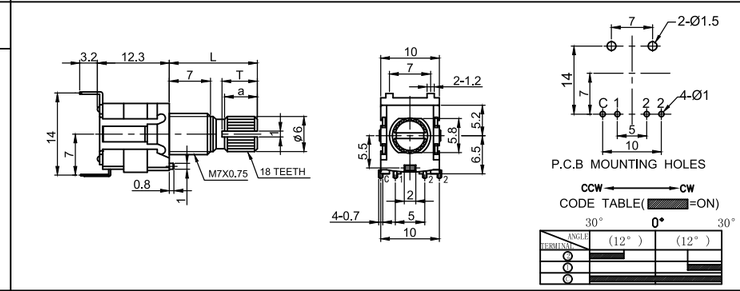

RS1004SWA0X-VA1

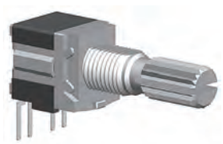

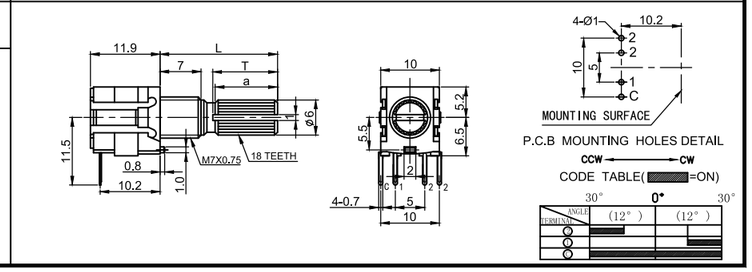

RS1101/1103 Series
ROTARY ROUTE SWITCH

MODEL 品名	DIMENSIONS 尺寸 (UNIT:mm)
RS1101SW[Z]0[X]-HA1	 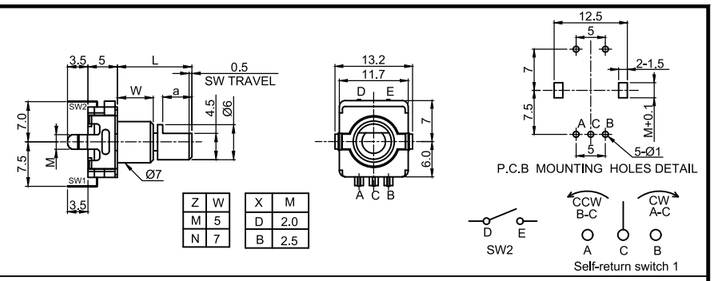
RS1101SWL0[X]-HA1	 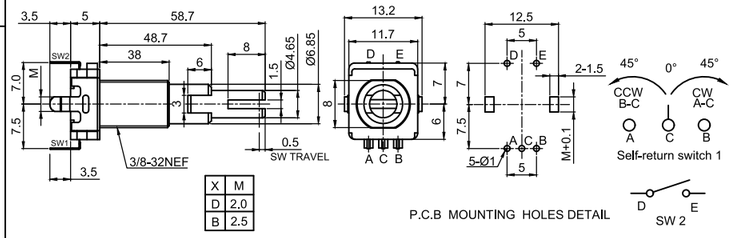
RS1101SW[Z]0F-VH1	 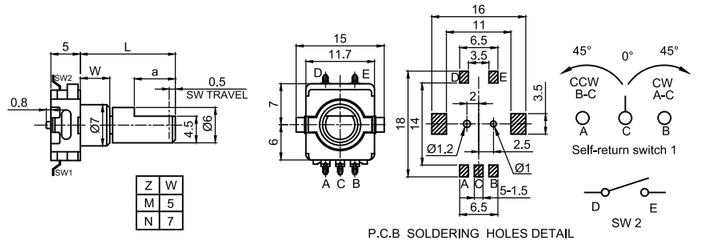
RS1103SW[Z]0[X]-HA1	 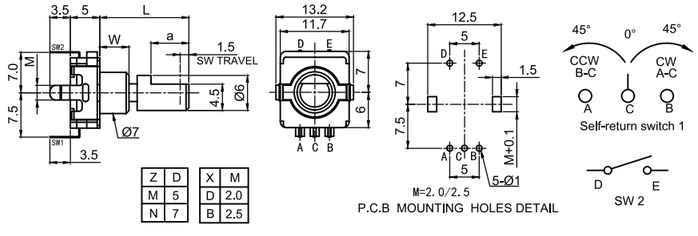
RS1103SW[Z]0F-VH1	 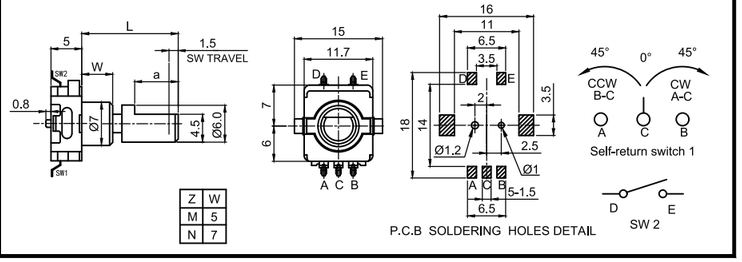

RS12/22 Series
ROTARY ROUTE SWITCH

MODEL 品名	DIMENSIONS 尺寸 (UNIT:mm)
RS1202X0X-HA1	 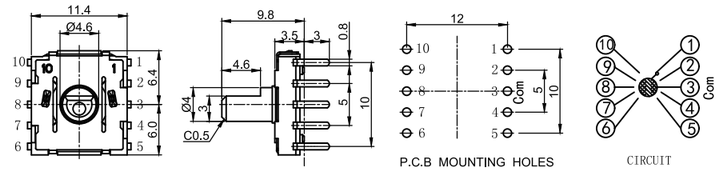
RS1201[G]0[Z]-VA[X]3/4	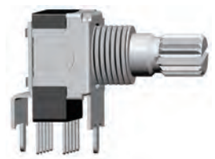 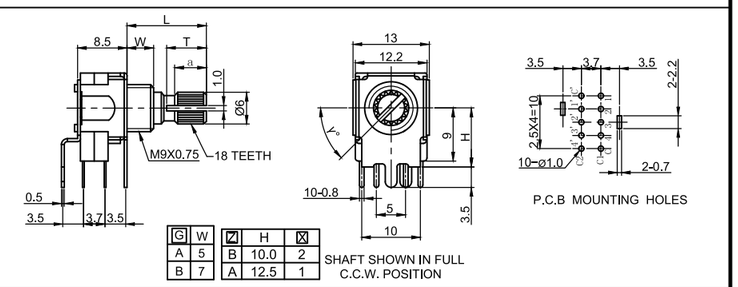
RS1204[G]0[Z]-VA[X]3/4	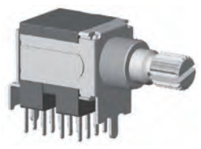 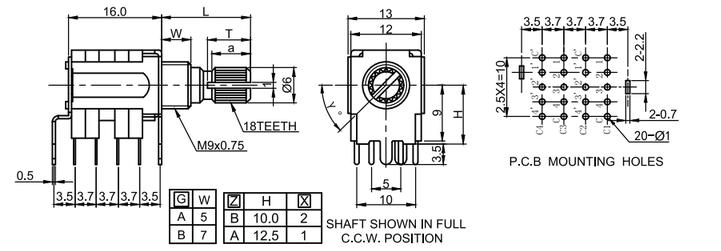
RS2201[G]0[Z]-VA[X]5/6	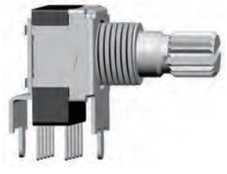 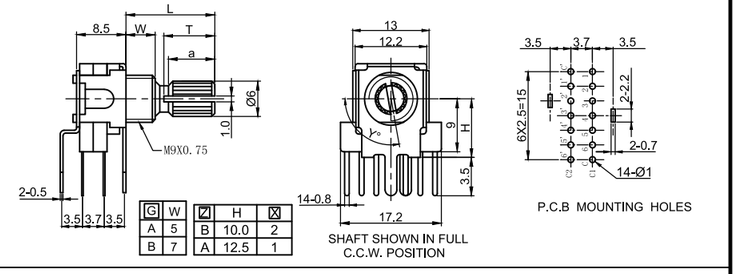
RS2204[G]0[Z]-VA[X]5/6	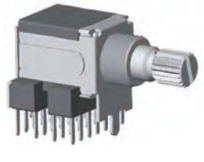 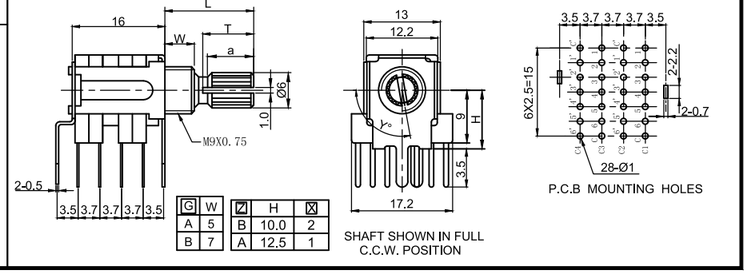

RS12/22 Series
ROTARY ROUTE SWITCH

RS12/22 SERIES COMMON SPECIFICATION			
MECHANICAL CHARACTERSTIC 机械特性			
Step Angle	每段角度	30°±3°	RS1202:40°±3°
Rotational Torque	旋转力矩	500±100gf.cm	
Terminal Strength	端子强度	more than 400gf	
Shaft Stop Strength	轴止档强度	more than 5Kgf.cm	
ELECTRICAL CHARACTERSTIC 电气特性			
Rating Power	额定功率	0.5A, DC 16V	
Contact Resistance	接触阻抗	50mΩ Max	
Insulation Resistance	绝缘电阻	100MΩ 1 Minute at DC 500V	
Dielectric Voltage	耐电压	1 Minute at AC 500V	
ENDURANCE CHARACTERSTIC 耐久特性			
Rotational Life	旋转寿命	15,000 cycles Min	

RS12/22 Circuit Diagram 回路图

RS1201A0 X -VA1-3 RS1204A0 X -VA1-3	RS1201A0 X -VA1-4 RS1204A0 X -VA1-4	RS2201A0 X -VA1-5 RS2204A0 X -VA1-5	RS2201A0 X -VA1-6 RS2204A0 X -VA1-6
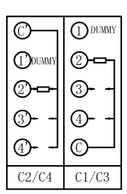 Y=15°	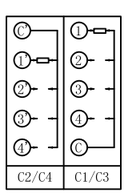 Y=45°	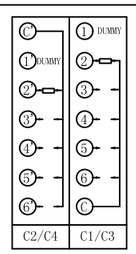 Y=75°	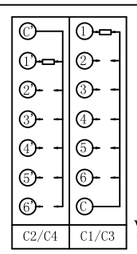 Y=105°

NOTE: “Y ”Shaft shown in full C.C.W. Position.
注明：Y°为轴心逆时针旋转停止位置。

RS13 Series
ROTARY ROUTE SWITCH

MODEL 品名 | DIMENSIONS 尺寸 | UNIT:mm

RS1312SWA0X-VA1

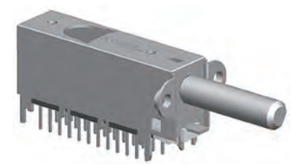

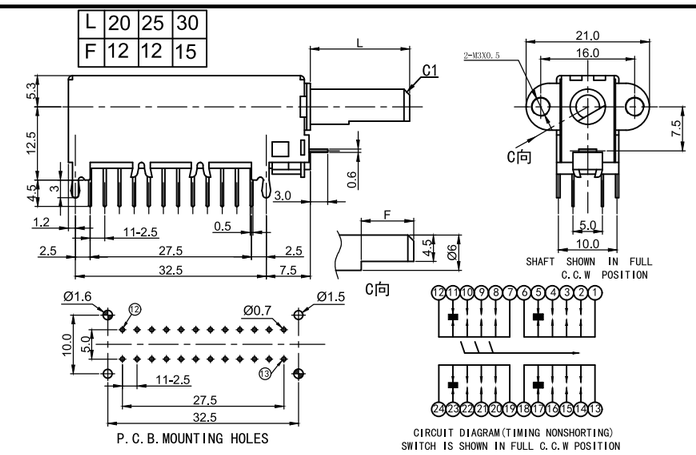

RS1316SWA0X-VA1

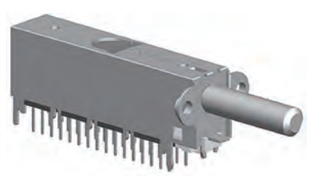

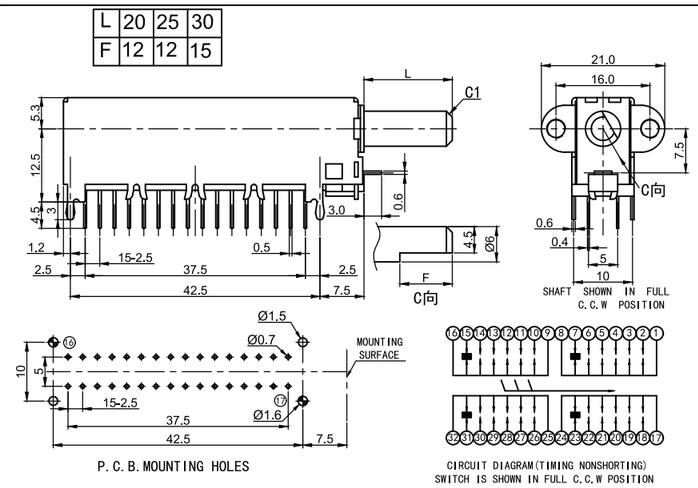

RS13 SERIES COMMON SPECIFICATION

SPECIFICATION 规格说明			
Step Angle	每段角度	30°±3°	
Number of Positions	接点数	RS1312：2 to 4	RS1316：4 to 6
Rotational Torque	旋转力矩	600±300gf.cm	
Shaft Stop Strength	轴止档强度	more than 8Kgf.cm	
Rating Power	额定功率	0.15A, DC 12V	
Contact Resistance	接触阻抗	50mΩ Max	
Insulation Resistance	绝缘电阻	100MΩ 1 Minute at DC 500V	
Rotational Life	旋转寿命	10,000 cycles Min	

RS17 Series
ROTARY SWITCH

MODEL 品名	DIMENSIONS 尺寸 UNIT:mm

RS1701X0A-HA1

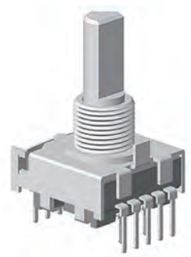

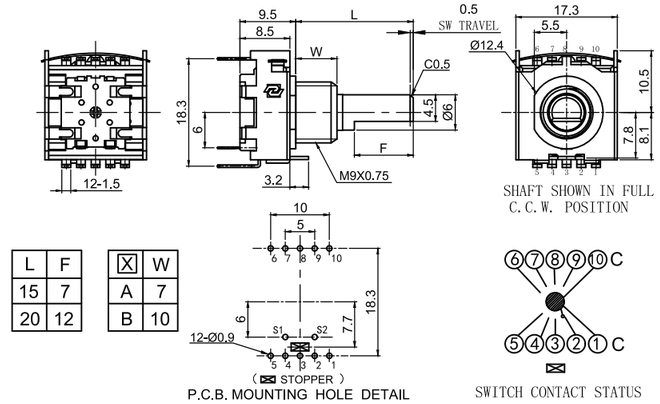

L	F
15	7
20	12

X	W
A	7
B	10

RS1702A0A-HA1

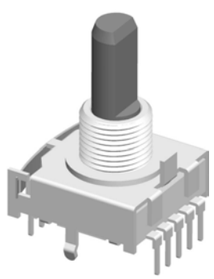

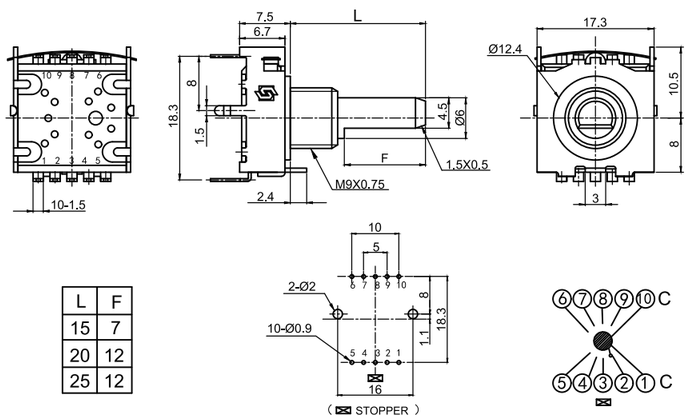

L	F
15	7
20	12
25	12

RS1703A0A-HA1

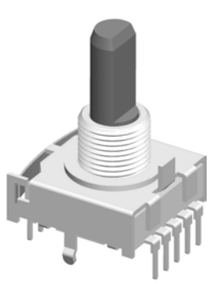

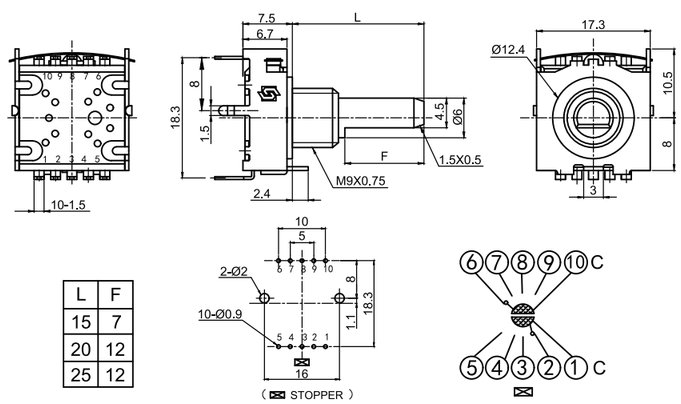

L	F
15	7
20	12
25	12

RS17 Series
ROTARY SWITCH

MODEL 品名	DIMENSIONS 尺寸 UNIT:mm

RS1704J0A-HA1

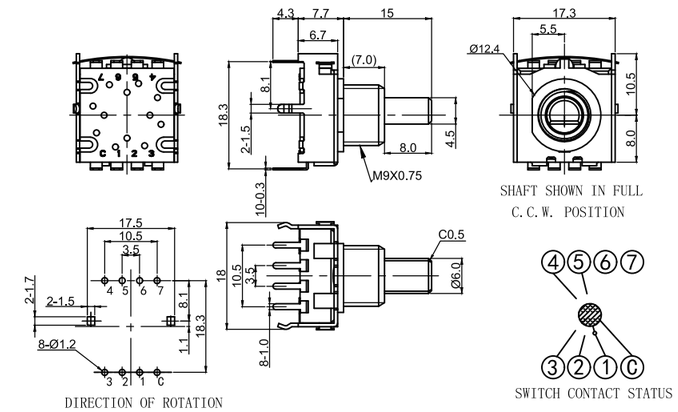

RS1705J0F-HA1

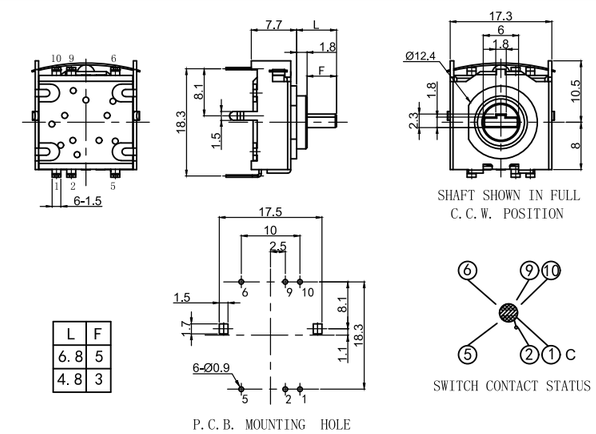

L	F
6.8	5
4.8	3

RS1706F0A-HA1

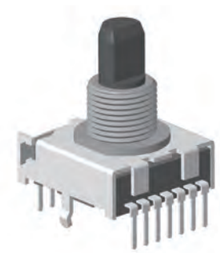

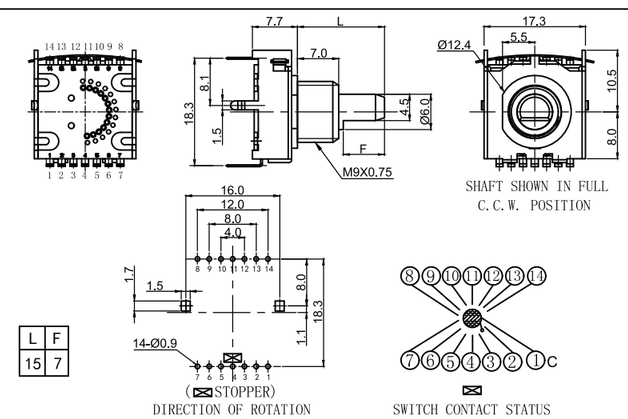

L	F
15	7

RS17/19 Series
ROTARY SWITCH

MODEL 品名 **DIMENSIONS 尺寸** UNIT:mm

ROTARY SWITCH RS17

		RS1701/02	RS1703	RS1704	RS1705	RS1706
Step Angle	每段角度	30°	30°	45°	30°	15°
Number of Positions	接点数	2-9	2、3、4	2、5	5	13
Number of Poles	极数	1	2	1	1	1
Rotational Torque	旋转力矩	300±100gf.cm				
Shaft Stop Strength	轴止档强度	More than 5Kgf.cm				
Changeover Timing	转换方式	Non shorting (非短路式)				
Rating Power	额定功率	0.3A, DC 16V				
Contact Resistance	接触阻抗	100mΩ Max				
Insulation Resistance	绝缘电阻	100MΩ 1 Minute at DC 100V				
Rotational Life	旋转寿命	10,000 cycles Min				
Switch Force	开关按压力	300～600gf				
Switch Life	开关按压寿命	20,000 cycles Min				

RS1902X0A-VA0

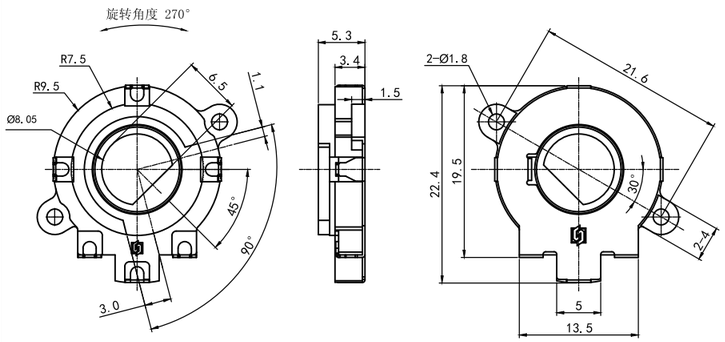

定位角度为 0°状态

ROTARY SWITCH RS19

MECHANICAL CHARACTERISTIC 机械特性		
1、Rotational Torque	旋转力矩	300±100 gf.cm
2、Total ratational angle	全回转角度	270°
3、Number of detents	定位数	8 detents
4、Angle of detents	间隔角度	0°→90°→120°→150°→180°→210°→240°→270°
5、Shaft Stop Strength	止档强度	≥ 2Kgf
ENDURANCE CHARACTERISTIC 耐久特性		
1、Rotational Life	旋转寿命	70,000 cycles

RS24/25 Series
ROTARY ROUTE SWITCH

MODEL 品名 DIMENSIONS 尺寸 UNIT:mm

RS240403A0X-HA1

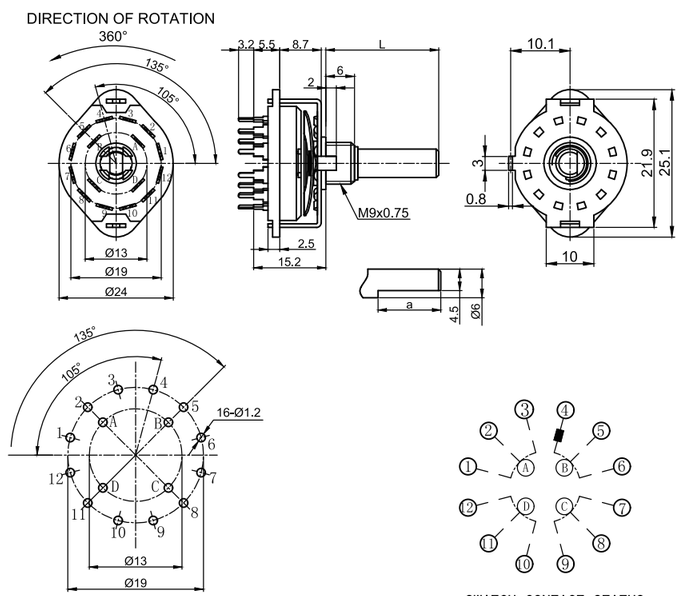

RS250206A0X-PA1

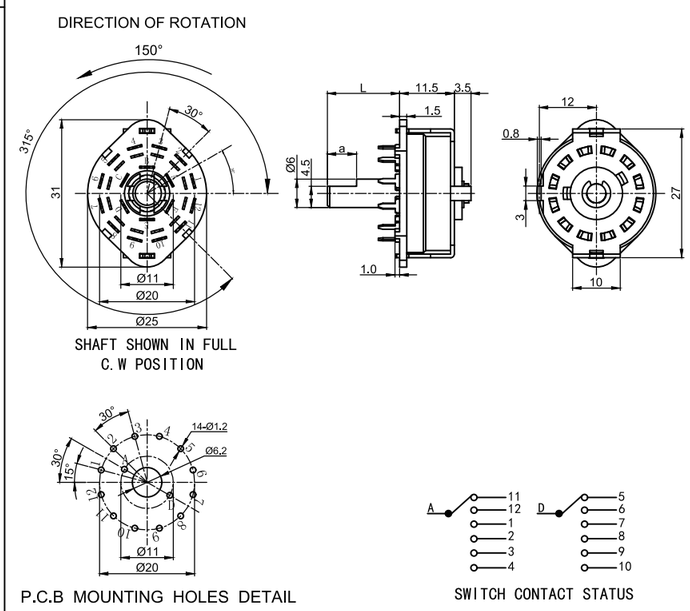

RS25 Series
ROTARY ROUTE SWITCH

MODEL 品名	DIMENSIONS 尺寸 UNIT:mm

RS250111A0X-HA1

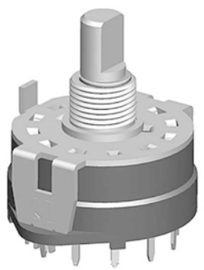

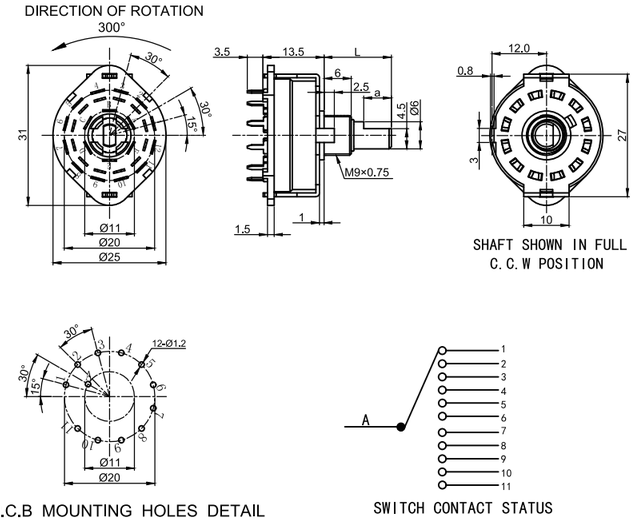

RS250206A0X-HW1

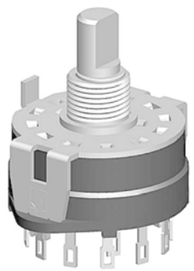

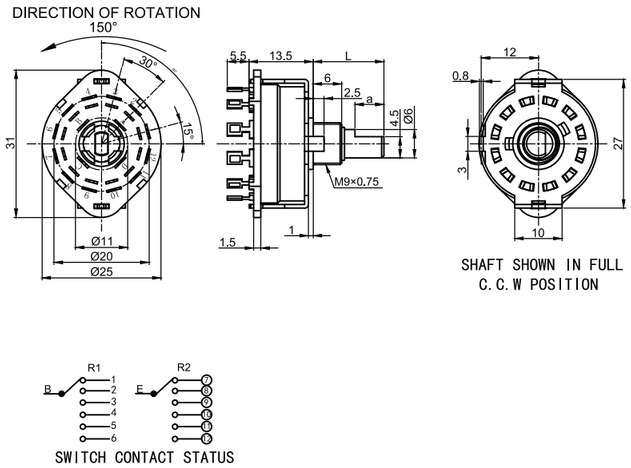

RS26 Series
ROTARY ROUTE SWITCH

DIMENSIONS 尺寸 UNIT:mm

RS260112A0X-HA1

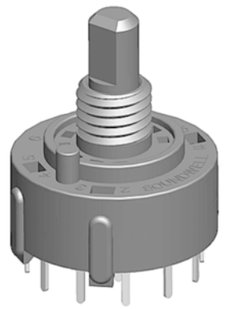

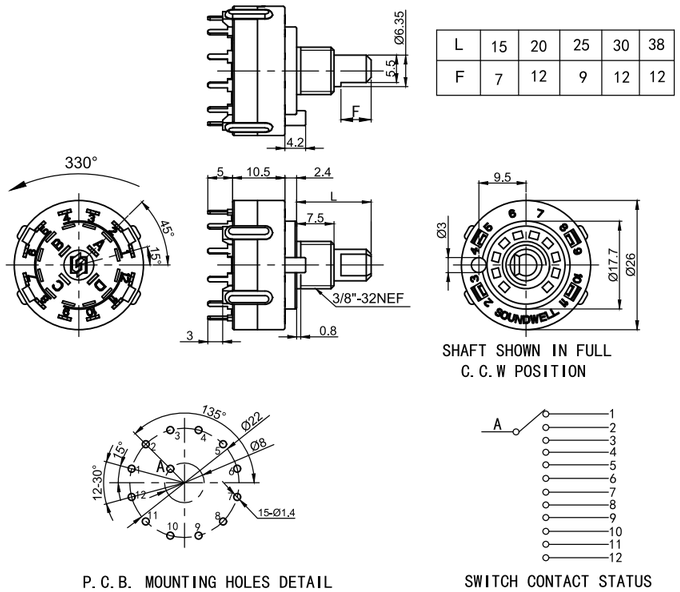

L	15	20	25	30	38
F	7	12	9	12	12

RS260206A0X-HW1

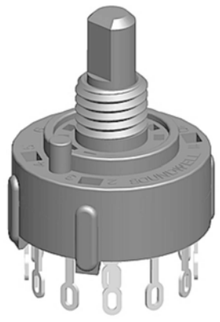

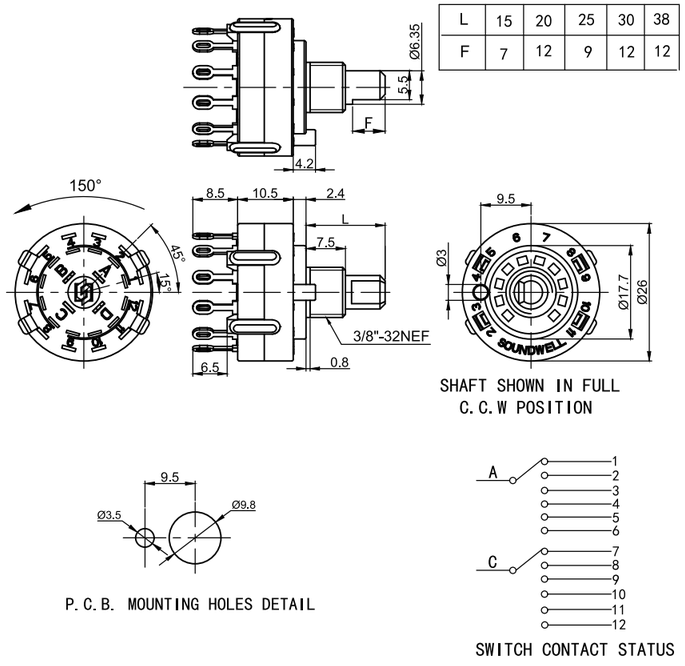

L	15	20	25	30	38
F	7	12	9	12	12

RS260107 Series
ROTARY ROUTE SWITCH

MODEL 品名	DIMENSIONS 尺寸 UNIT:mm
RS260107A0X-HA1	

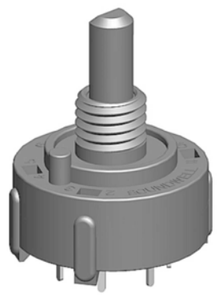

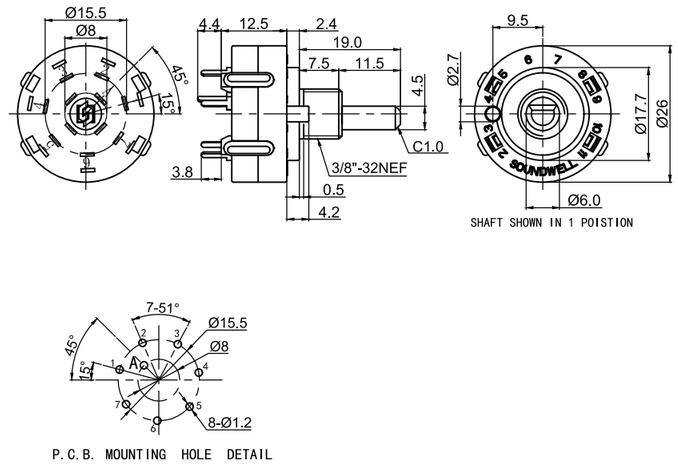

RS260107 SERIES COMMON SPECIFICATION

MECHANICAL CHARACTERISTIC 机械特性		
Step Angle	每段角度	51.5°± 3°(7CC/360°)
Rotational Torque	旋转力矩	200～700gf.cm
Terminal Strength	端子强度	more than 500gf
ELECTRICAL CHARACTERISTIC 电气特性		
Rating Power	额定功率	0.3A, DC 30V
Contact Resistance	接触阻抗	50mΩ Max
Insulation Resistance	绝缘电阻	100MΩ 1 Minute at DC 500V
Dieletric Voltage	耐电压	1 Minute at DC 500V
ENDURANCE CHARACTERISTIC 耐久特性		
Rotational Life	旋转寿命	10,000 cycles

SWITCH CONTACT STATUS

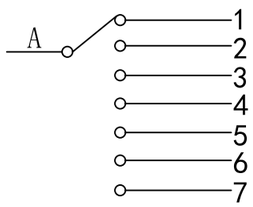

RS260109 Series
ROTARY ROUTE SWITCH

MODEL 品名	DIMENSIONS 尺寸 UNIT:mm
RS260109A0X-HA1	

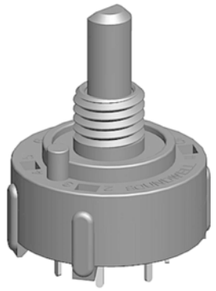

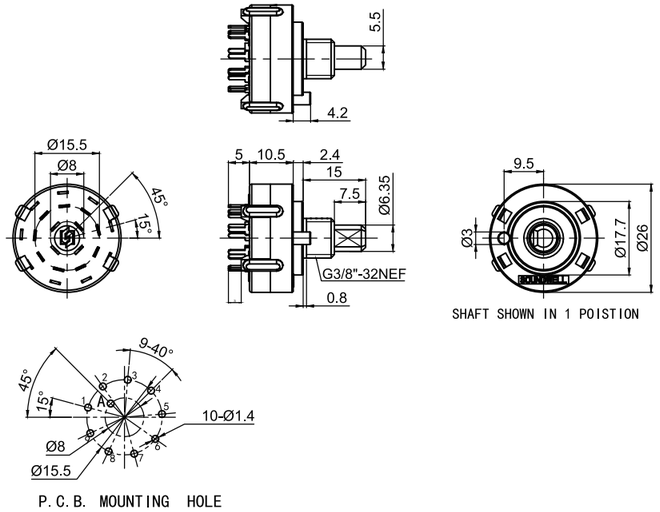

RS260109 SERIES COMMON SPECIFICATION

MECHANICAL CHARACTERISTIC 机械特性		
Step Angle	每段角度	40°±3°(9CC/360°)
Rotational Torque	旋转力矩	200～700gf.cm
Terminal Strength	端子强度	more than 500gf
ELECTRICAL CHARACTERISTIC 电气特性		
Rating Power	额定功率	0.3A, DC 30V
Contact Resistance	接触阻抗	50mΩ Max
Insulation Resistance	绝缘电阻	100MΩ 1 Minute at DC 500V
Dieletric Voltage	耐电压	1 Minute at DC 500V
ENDURANCE CHARACTERISTIC 耐久特性		
Rotational Life	旋转寿命	10,000 cycles

SWITCH CONTACT STATUS

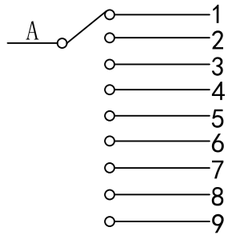

RS24/25/26 Series
ROTARY ROUTE SWITCH

RS24/25/26 SERIES COMMON SPECIFICATION		
SPECIFICATION 规格说明		
MECHANICAL CHARACTERISTIC 机械特性		
Step Angle	每段角度	30°± 3°
Rotational Torque	旋转力矩	200～1000gf.cm
Terminal Strength	端子强度	more than 500gf
Shaft Stop Strength	轴止档强度	more than 3Kgf.cm
ELECTRICAL CHARACTERISTIC 电气特性		
Rating Power	额定功率	0.3A, DC 30V
Contact Resistance	接触阻抗	50mΩ Max
Insulation Resistance	绝缘电阻	100MΩ 1 Minute at DC 500V
Dieletric Voltage	耐电压	1 Minute at DC 500V
ENDURANCE CHARACTERISTIC 耐久特性		
Rotational Life	旋转寿命	10,000 cycles

MODEL 型号	POLE 极	POSITION 位
RS24/25/26 0102	1	2
RS24/25/26 0103	1	3
RS24/25/26 0104	1	4
RS24/25/26 0105	1	5
RS24/25/26 0106	1	6
RS24/25/26 0107	1	7
RS24/25/26 0108	1	8
RS24/25/26 0109	1	9
RS24/25/26 0110	1	10
RS24/25/26 0111	1	11
RS24/25/26 0112	1	12

MODEL 型号	POLE 极	POSITION 位
RS24/25/26 0202	2	2
RS24/25/26 0203	2	3
RS24/25/26 0204	2	4
RS24/25/26 0205	2	5
RS24/25/26 0206	2	6
RS24/25/26 0302	3	2
RS24/25/26 0303	3	3
RS24/25/26 0304	3	4
RS24/25/26 0402	4	2
RS24/25/26 0403	4	3
RS24/25 0602	6	2

RS24/25/26 SWITCH CONTACT STATUS

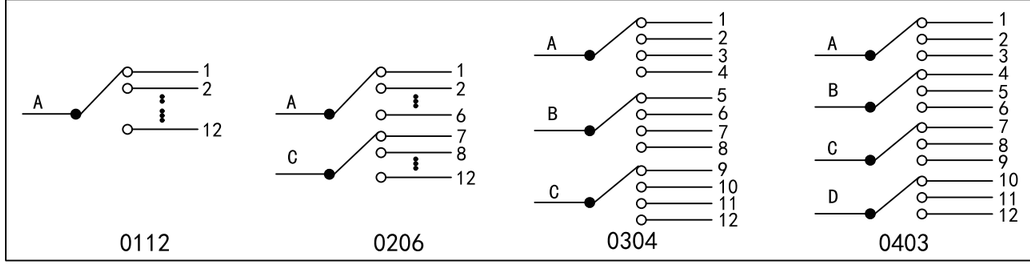

RS24/25/26 Series
ROTARY ROUTE SWITCH

RS24/25 SERIES SHAFT TYPE

DIMENSIONS UNIT:mm

FA-TYPE

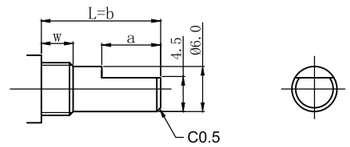

L	10	15	17	20	25	30	35	40
a	2.5	7	8	10	12	12	12	12
W	6							

FB-TYPE

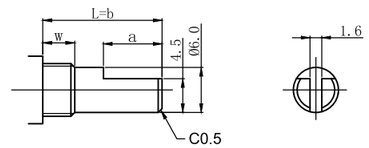

L	10	15	17	20	25	30	35	40
a	2.5	7	8	10	12	12	12	12
W	6							

KA-TYPE

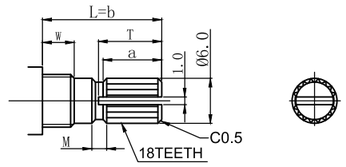

L	10	15	17	18	20	25	30	35	40
T	2.5	7.5	9.5	10	12	14	14	14	14
a	2	6.5	8	8	10	12	12	12	12
M	0.5	1	1.5	2	2	4	4	4	4
W	6								

RA-TYPE

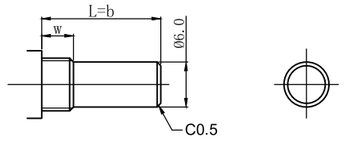

L	10	15	17	18	20	25	30	35	40
W	6								

RB-TYPE

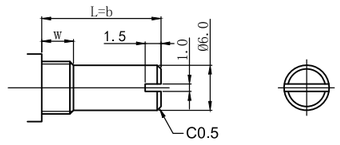

L	10	15	17	18	20	25	30	35	40
W	6								

RP27 Series
ROTARY ROUTE SWITCH

MODEL 品名	DIMENSIONS 尺寸	UNIT:mm

RP2701SWA0A-HA1

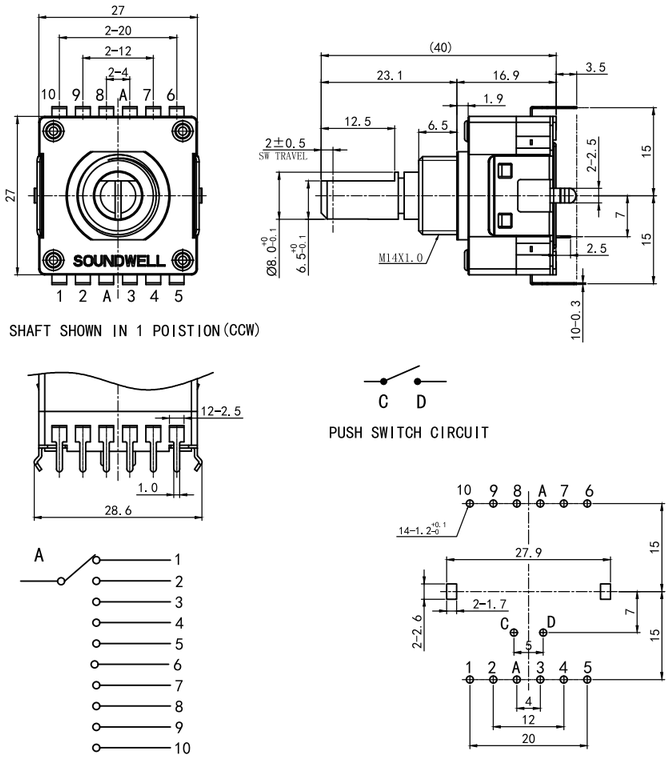

ROTARY ROUTE SWITCH RP27

MECHANICAL CHARACTERISTIC 机械特性		
1、Rotational Torque	旋转力矩	400-600gf.cm
2、Step angle	每段角度	36°±3°
3、Shaft wobble	轴摆动	0.25 mm Max
4、Number of detent	定位点数	10 detents
ELECTRICAL CHARACTERISTIC 电气特性		
1、Rating Voltage	额定电压	DC 30V
2、Insulation resistance	绝缘阻抗	100MΩ 1 Minute at DC 500V
3、Dielectric Voltage	耐电压	1 Minute at AC 500V
4、Contact resistance	接触阻抗	100Ω Max
ENDURANCE CHARACTERISTIC 耐久特性		
1、Rotational Life	旋转寿命	30,000 cycles
2、Push switch	开关按压寿命	20,000 cycles

RE29 Series
ROTARY ROUTE SWITCH

MODEL 品名	DIMENSIONS 尺寸	UNIT:mm

RE2903SWA0X-VA1

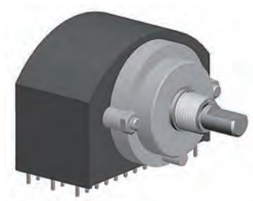

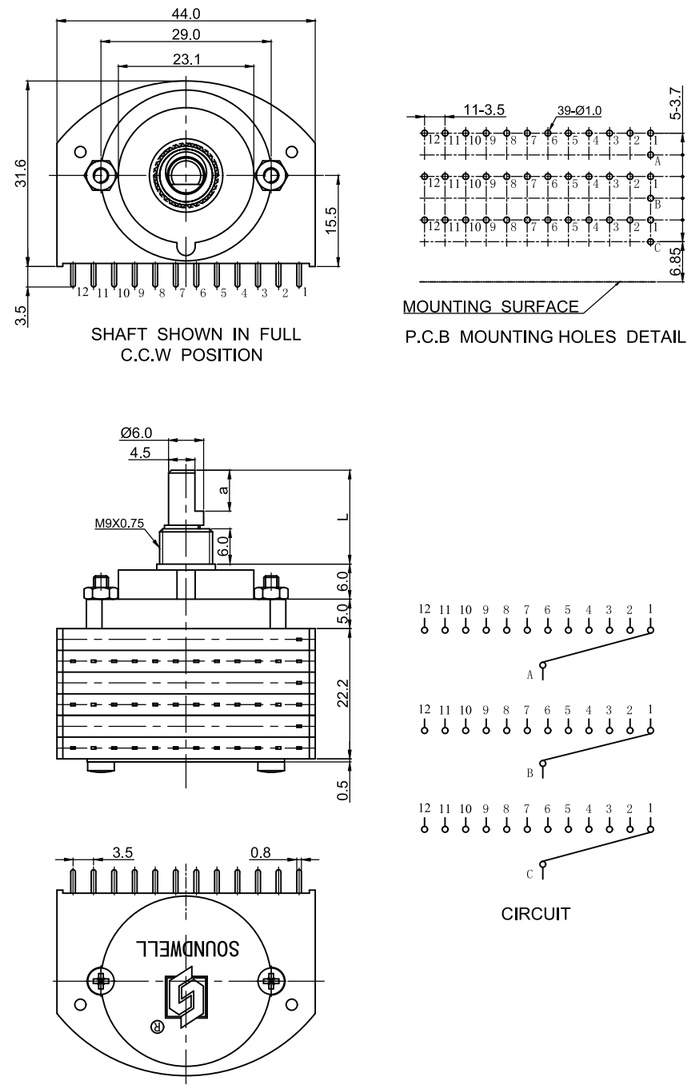

RE29 Series
ROTARY ROUTE SWITCH

MODEL 品名	DIMENSIONS 尺寸	UNIT:mm

RE2901SWA0X-VA1

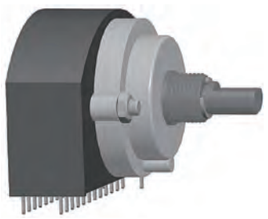

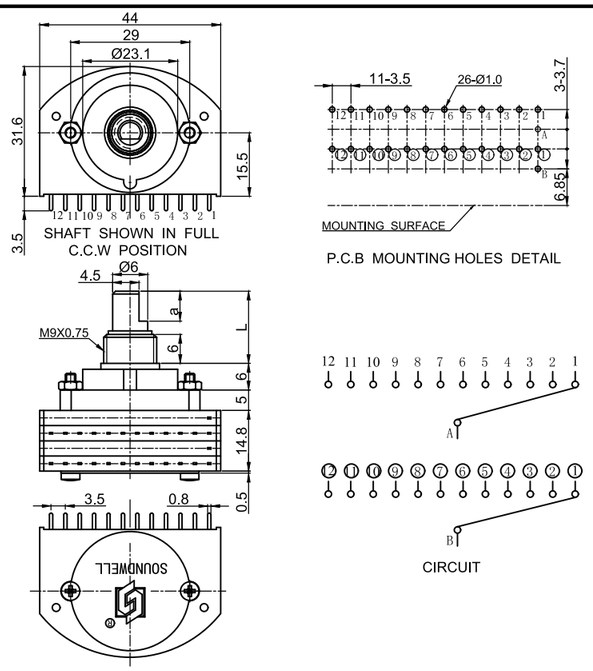

RE2904SWA0X-VA1

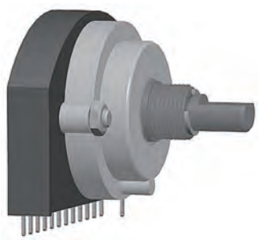

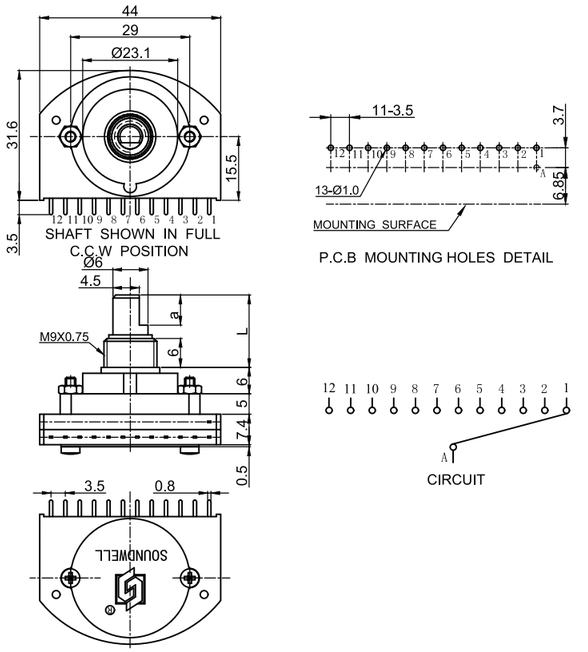

RE29/30 Series
ROTARY ROUTE SWITCH

MODEL 品名	DIMENSIONS 尺寸	UNIT:mm

RE2904SWA0X-VA1-1-2-6

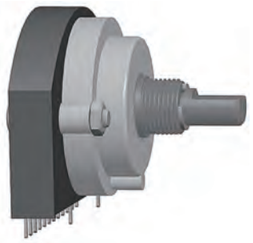

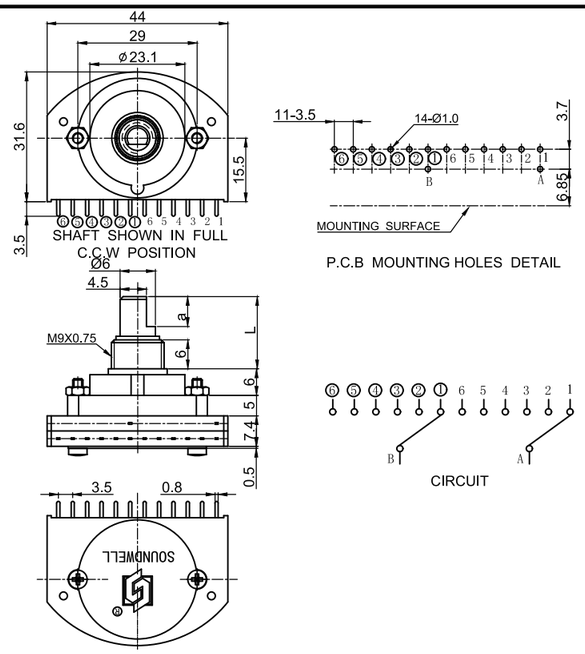

RE3002SWB0X-VA1

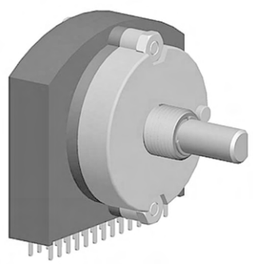

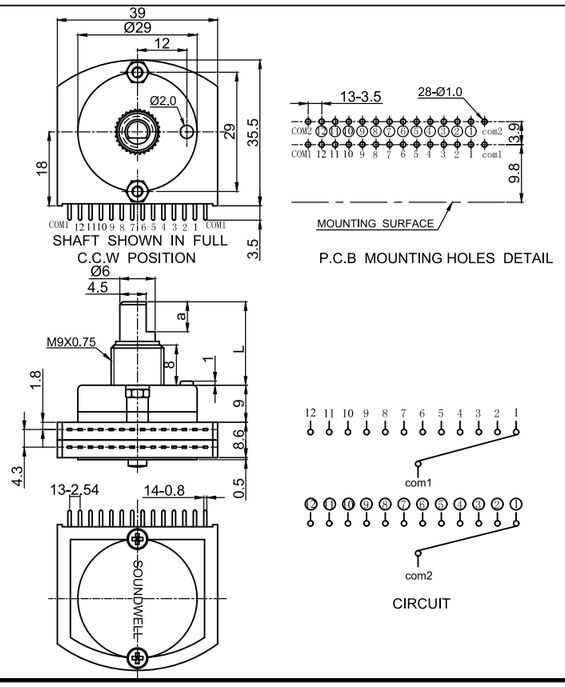

RE31 Series
ROTARY ROUTE SWITCH

MODEL 品名	DIMENSIONS 尺寸	UNIT:mm

RE3101SWA0X-WA1

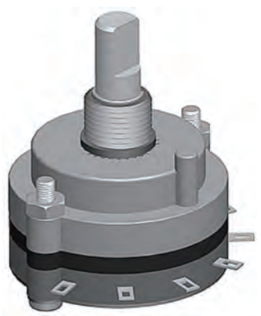

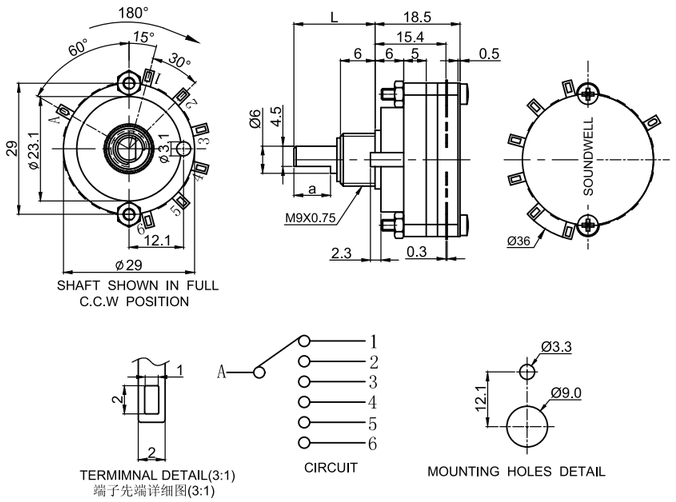

RE3104SWA0X-WA1

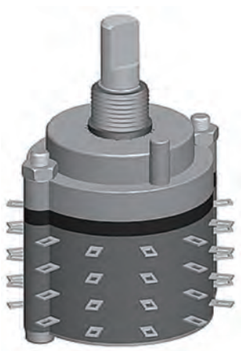

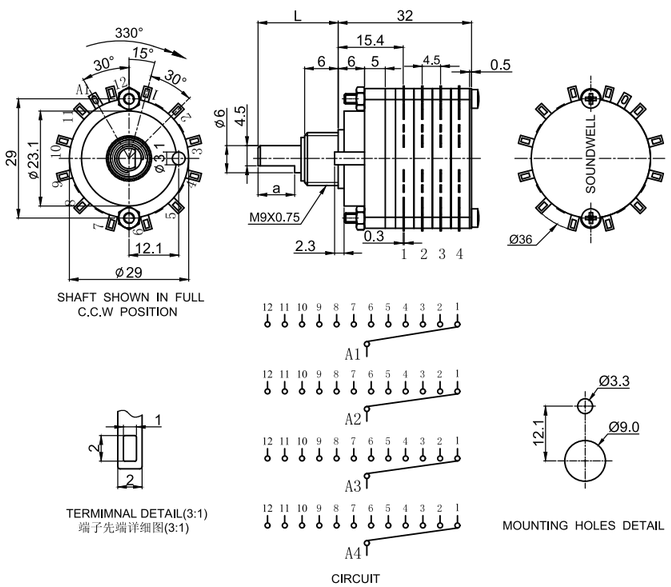

RE32 Series
ROTARY ROUTE SWITCH

MODEL 品名	DIMENSIONS 尺寸	UNIT:mm

RE3202SWB0X-HA1-1-2-10

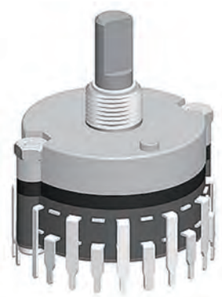

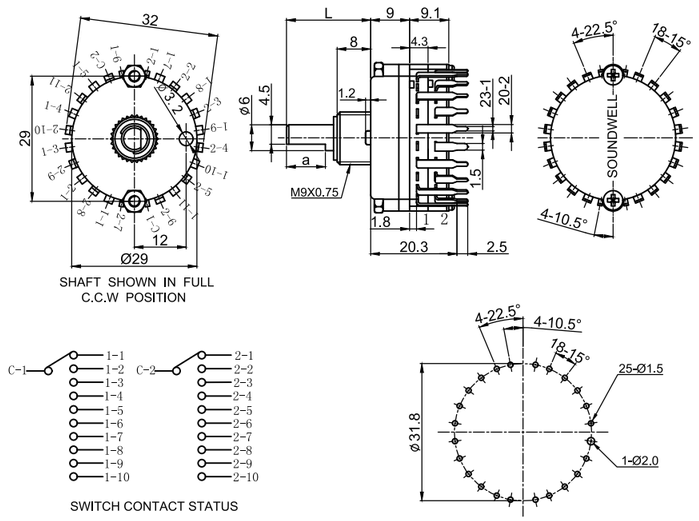

RE3202SWB0X-HA1-1-2-12

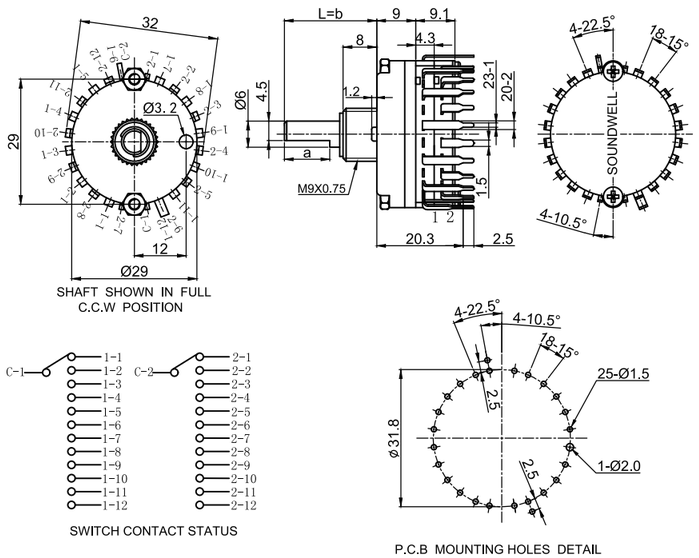

RE29/30/31/32 Series
ROTARY ROUTE SWITCH

RE29/30/31/32 SERIES SHAFT TYPE

DIMENSIONS UNIT:mm

FA-TYPE

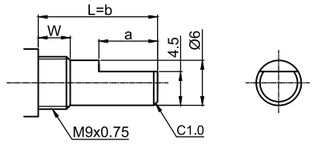

L	10	16	18.5	20	25	30	35	40
a	2.5	7	9	10	12	12	12	12
W	6/8/12							

KA-TYPE

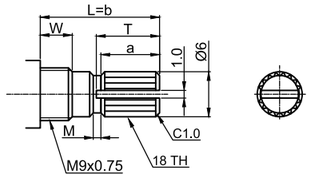

L	18	20	25	30	35	40
T	10	12	14	14	14	14
a	8	10	12	12	12	12
M	2	2	4	4	4	4
W	6/8/12					

RE29/30/31/32 SERIES COMMON SPECIFICATION

SPECIFICATION 规格说明

MECHANICAL CHARACTERISTIC 机械特性

Step Angle	每段角度	30°± 3°
Positions	段位数	2 to 12
Rotational Torque	旋转力矩	200～1000gf.cm
Terminal Strength	端子强度	more than 400gf
Shaft Stop Strength	轴止档强度	more than 3Kgf.cm

ELECTRICAL CHARACTERISTIC 电气特性

Rating Power	额定功率	0.3A, DC 30V
Contact Resistance	接触阻抗	100mΩ Max
Insulation Resistance	绝缘电阻	100MΩ 1 Minute at DC 500V
Dieletric Voltage	耐电压	1 Minute at AC 500V

ENDURANCE CHARACTERISTIC 耐久特性

Rotational Life	旋转寿命	10,000 cycles

SS3001/3004 Series
SLIDING ROUTE SWITCH

MODEL 品名 | DIMENSIONS 尺寸 | UNIT:mm

SS3001SWX0X-VA1

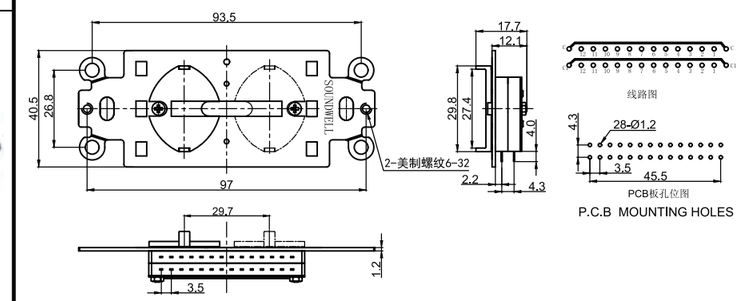

SS3004SWX0X-VA1

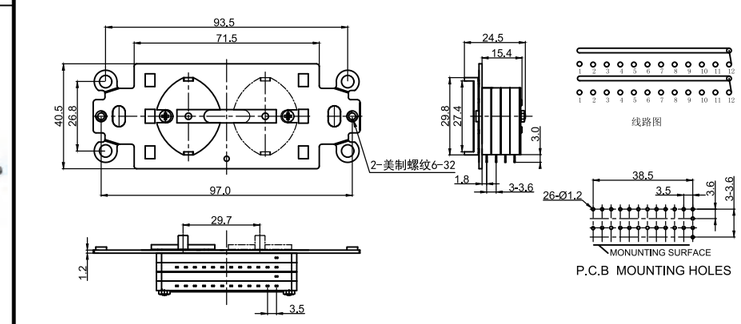

SS3001/SS3004 SERIES COMMON SPECIFICATION

Specification 规格说明

MODEL		SS3001/SS3004
Rating Power	额定功率	0.3A, DC 30V
Dieletric Voltage	耐电压	100 MΩ 1 Minute at AC 500V
Insulation Resistance	绝缘阻抗	100 MΩ 1 Minute at DC 500V
Contact Resistance	接触阻抗	70mΩ Max
Operation Force	操作力	300±150gf
Sliding Life	滑动寿命	10,000 cycles Min

MS14 Series
SLIDING ROUTE SWITCH

MODEL 品名	DIMENSIONS 尺寸	UNIT:mm

MS14P010TG4-020

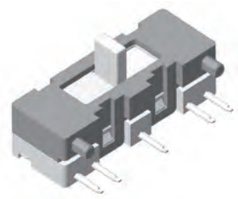

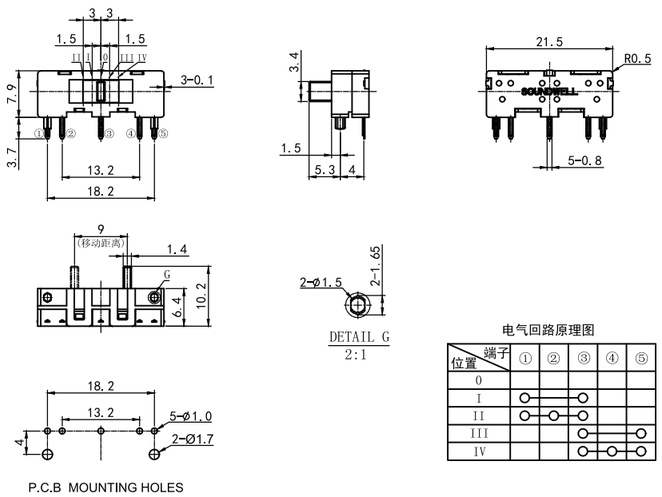

电气回路原理图

位置 \ 端子	①	②	③	④	⑤
0					
I	○	—	○		
II	○	○	○		
III			○	—	○
IV			○	○	○

MS14 SERIES COMMON SPECIFICATION

Specification 规格说明

Rating Power	额定功率	50mA DC 5V
Dieletric Voltage	耐电压	100 MΩ 1 Minute at AC 500V
Insulation Resistance	绝缘阻抗	100 MΩ 1 Minute at DC 250V
Contact Resistance	接触阻抗	100mΩ Max
Operation Force	操作力	50gf Max
Sliding Life	滑动寿命	100,000 cycles Min

Products Series Code Explanation
集成模组

(1) (2) (3) (4) (5) (6) (7) (8) (9)
MD 58 0 4 01 04 S - CON - 000

(1)：Series 系列
Module style 模组式

(2)：Size 外形尺寸

SIZE / 外形尺寸（mm/毫米）												
35	37	46	50	51	52	58	60	72	75	76	78	83
●	●	●	●	●	●	●	●	●	●	●	●	●

(3)：Design Code 设计代号
0、1、2、3....

(4)：Module Type 模组类型

代码	说明
1	电容式旋钮
2	接触式编码旋钮
3	光电式编码旋钮
4	电阻式旋钮
5	开关式旋钮
6	按键面板
7	磁电式编码旋钮

(5)：Switch Type 开关类型。

代码	说明
00	不带开关
01	带一个按压开关
02	带一个按压开关和一个拉拔开关
03	带触摸开关
04	带多个按压开关

(6)：Display Type 显示方式。

代码	说明
00	无显示
01	显示屏（TFT、VA、OLED）
02	带数码管显示屏
03	带触摸显示屏（TFT、VA、OLED）
04	带丝印字符/图案
05	带LED灯点亮字符、图案或氛围灯...

(7)：Finish 表面处理。

代码	说明
C	晒纹
U	喷涂（包含油漆和喷粉）
S	水镀铬
J	金属阳极喷砂
Z	真空镀
T	贴面板膜片
X	无特殊处理

(8)：出线方式。
FFC 、FPC
CON:连接器
HAR:线束
WCX：无线通信

(9): Flow Code 流水号

MD Series
INTEGRATED MODULES

品名	尺寸简图	显示方式	通讯方式	档位数（个）	开关行程(mm)	寿命(周)
MD35020104J-FPC 	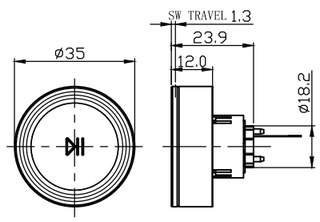	丝印	-	30	1.3	30,000
MD370050102J-FFC 	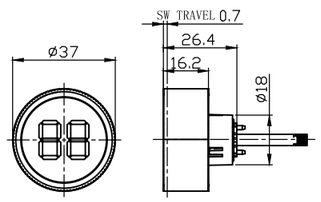	数码管	IIC	30	0.7	30,000
MD44020100J-FFC 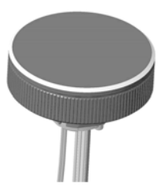	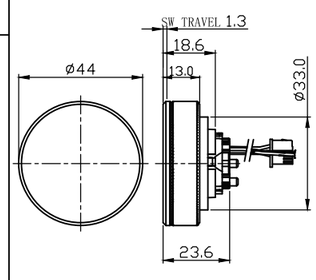	无显示	-	30	1.3	30,000
MD45030005J-HAR 	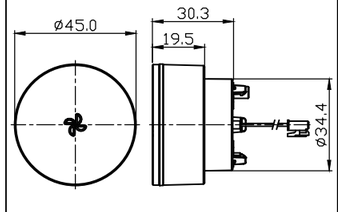	LED 氛围灯	IIC	30	-	30,000

MD Series
INTEGRATED MODULES

品名	尺寸简图	显示方式	通讯方式	档位数（个）	开关行程(mm)	寿命(周)
MD46020101J-FPC 	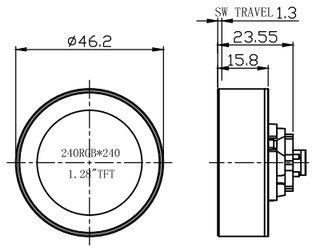	1.28″ TFT 圆屏	UART	30	1.3	30,000
MD50020002S-HAR 	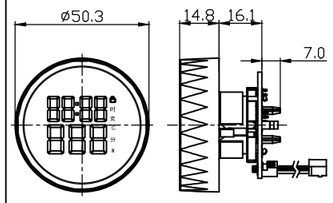	数码管	IIC	30	-	30,000
MD50020004S-HAR 	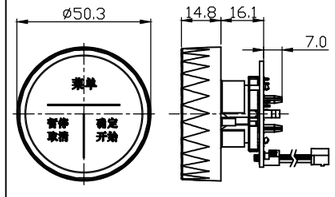	触摸开关	IIC	30	-	30,000
MD50020102U-CON 	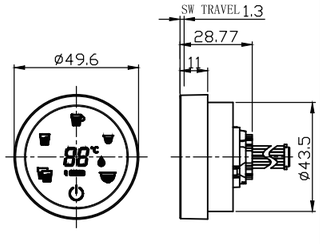	数码管	IIC	30	1.3	30,000

MD Series
INTEGRATED MODULES

品名	尺寸简图	显示方式	通讯方式	档位数（个）	开关行程(mm)	寿命(周)
MD50120101J-FPC 	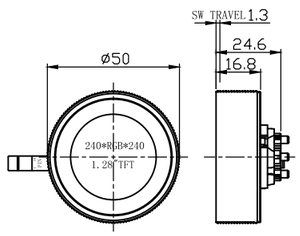	1.28″TFT	UART	30	1.3	30,000
MD51020102C-HAR 	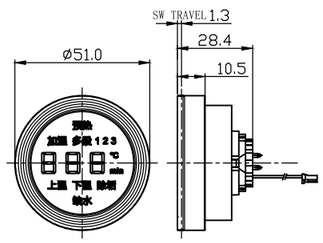	数码管	IIC	30	1.3	30,000
MD51020101J-FPC 	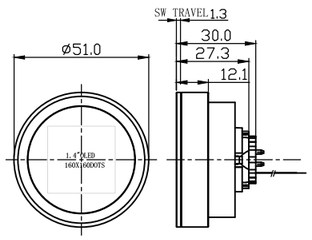	1.4″OLED (White)	SPI	30	1.3	30,000
MD51020104J-HAR 	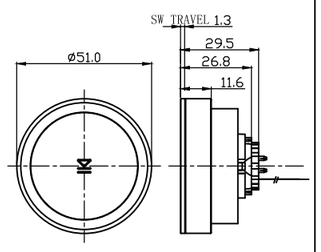	丝印	–	30	1.3	30,000

MD Series
INTEGRATED MODULES

品名	尺寸简图	显示方式	通讯方式	档位数（个）	开关行程(mm)	寿命(周)
MD52020101J-FPC 	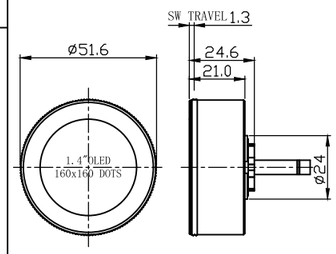	1.4″OLED (White)	UART	18	1.3	50,000
MD53020100J-HAR 	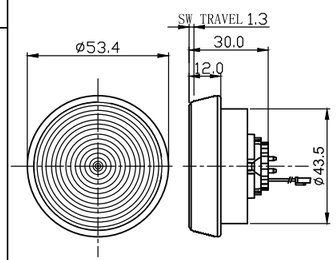	CD纹盖板	–	30	1.3	30,000
MD54020102X-HAR 	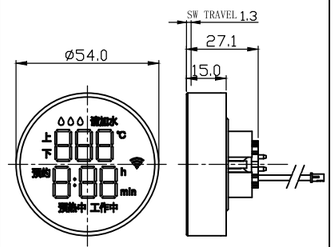	数码管	IIC	30	1.3	30,000
MD58040104S-C0N 	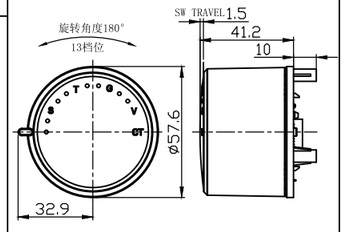	RGB显示图标	IIC	13	1.5	30,000

MD Series
INTEGRATED MODULES

品名	尺寸简图	显示方式	通讯方式	档位数（个）	开关行程(mm)	寿命(周)
MD60020001J-CON	 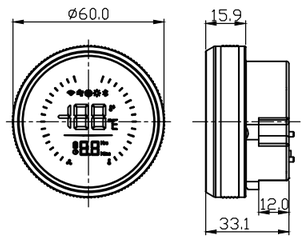	VA屏	SPI	30	-	30,000
MD60020002Z-HAR	 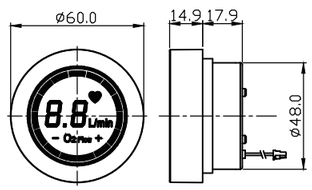	数码管	IIC	30	-	30,000
MD68020002X-C0N	 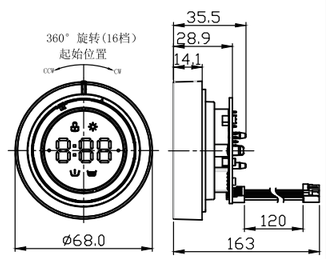	数码管	IIC	16	-	30,000
MD70020002U-CON	 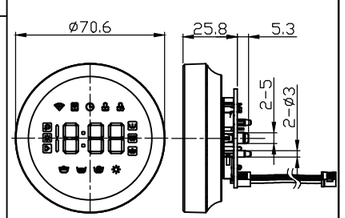	数码管	IIC	14	-	30,000

MD Series
INTEGRATED MODULES

品名	尺寸简图	显示方式	通讯方式	档位数（个）	开关行程(mm)	寿命(周)
MD72020002S-CON	 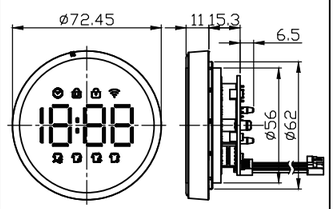	数码管	IIC	16	-	30,000
MD75020001U-CON	 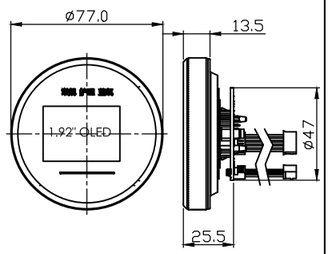	1.92″ OLED (White)	SPI	14	-	30,000
MD75020002S-HAR	 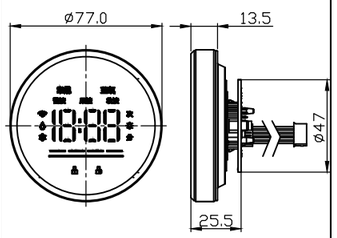	数码管	IIC	14	-	30,000
MD75020005J-CON	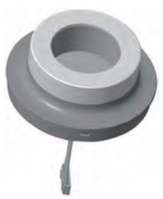 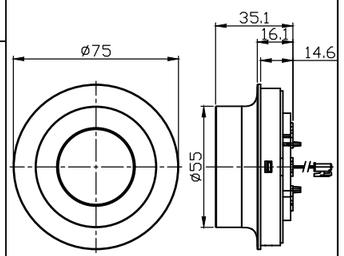	LED灯圈显示	IIC	30	-	30,000

MD Series
INTEGRATED MODULES

品名	尺寸简图	显示方式	通讯方式	档位数（个）	开关行程(mm)	寿命（周）
MD75030802J-HAR	 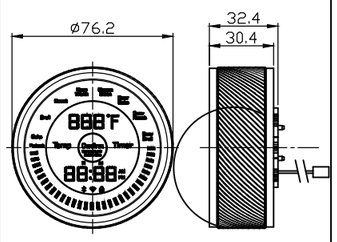	数码管	IIC	30	1.0	30,000
MD76030101S-CON	 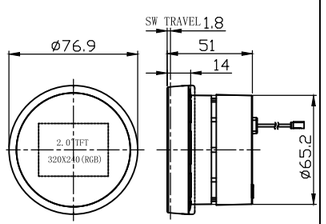	2″TFT	UART	24	1.8	100,000
MD76030102Z-CON	 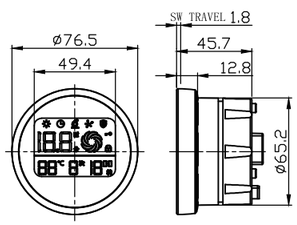	数码管	IIC	24	1.8	50,000
MD76030101Z-CON	 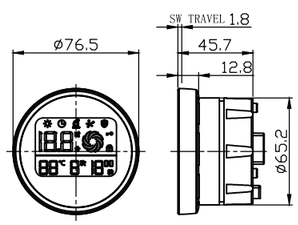	VA屏	IIC	24	1.8	50,000

MD Series
INTEGRATED MODULES

品名	尺寸简图	显示方式	通讯方式	档位数（个）	开关行程(mm)	寿命（周）
MD78030101J-CON	 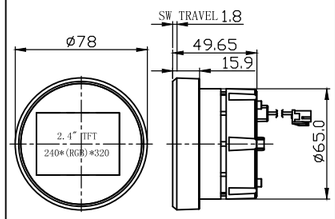	2.4″TFT	UART	24	1.8	50,000
MD83020103S-FPC	 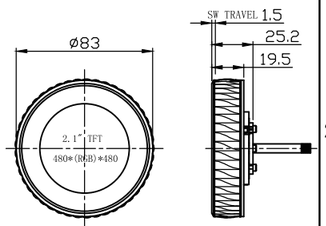	2.1″TFT	UART	18	1.5	30,000
MD83020106U-FPC	 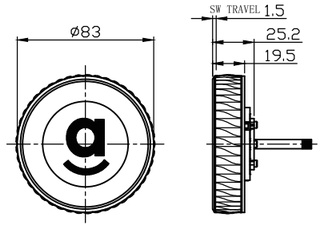	丝印图案	UART	18	1.5	30,000
MD50010000A-WCX	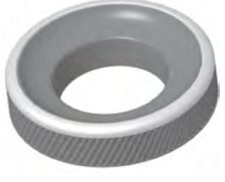 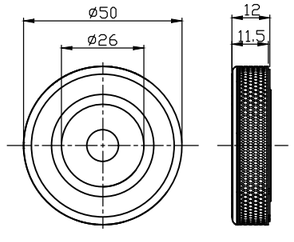	–	电容感应式	30	–	50,000

MQ51 Series

INTEGRATED MODULES

MODEL 品名	DIMENSIONS 尺寸	UNIT:mm

MQ51030000U-FPC

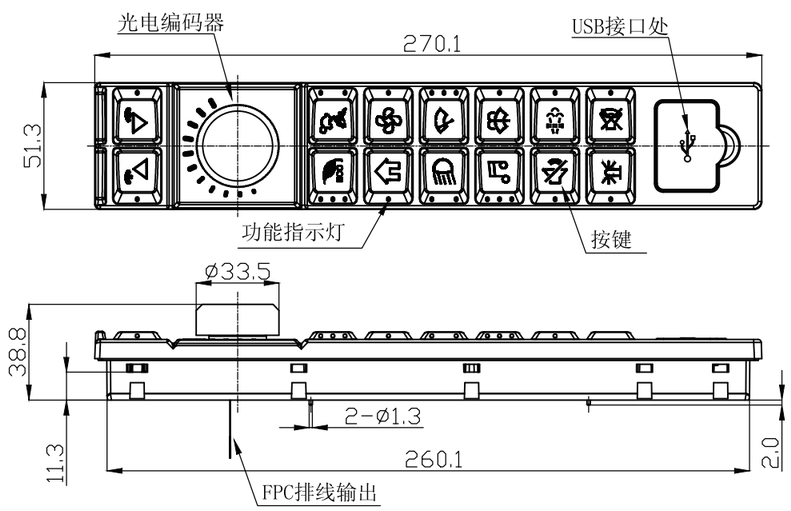

MQ51 SERIES COMMON SPECIFICATION

Rotational Torque	旋转力矩	400~900gf.cm
Rotational Life	旋转寿命	100,000 cycles Min

Resolution and Output signal

SERIES 系列	RESOLUTION 分解能力	DETENT 定位	Rotation direction 旋转方向	SIGNAL 信号	OUTPUT PHASE 输出波形
MQ51	10P	20	C.W (顺时针方向)	A(Terminal A-C)	OFF / ON
				B(Terminal B-C)	OFF / ON

MQ60 Series

INTEGRATED MODULES

MODEL 品名	DIMENSIONS 尺寸	UNIT:mm

MQ60030004U-FPC-

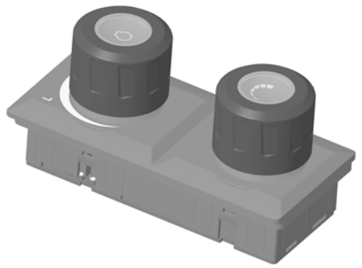

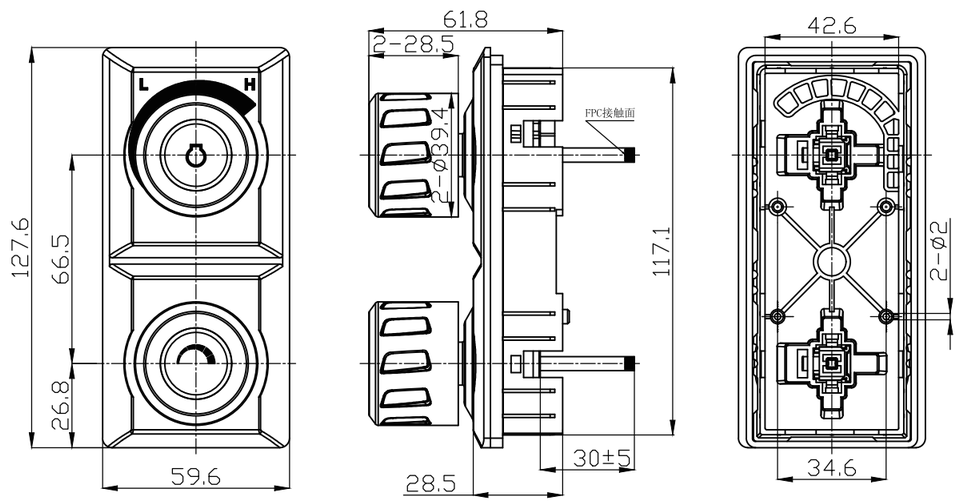

MQ60 SERIES COMMON SPECIFICATION

Rotational Torque	旋转力矩	900±300gf.cm
Rotational Life	旋转寿命	100,000 cycles Min

Resolution and Output signal

SERIES 系列	RESOLUTION 分解能力	DETENT 定位	Rotation direction 旋转方向	SIGNAL 信号	OUTPUT PHASE 输出波形
MQ60	12P	24	C.W (顺时针方向)	A(Terminal A-C)	OFF / ON
				B(Terminal B-C)	OFF / ON

MQ65 Series

INTEGRATED MODULES

MODEL 品名	DIMENSIONS 尺寸	UNIT:mm

MQ65030105U-CON

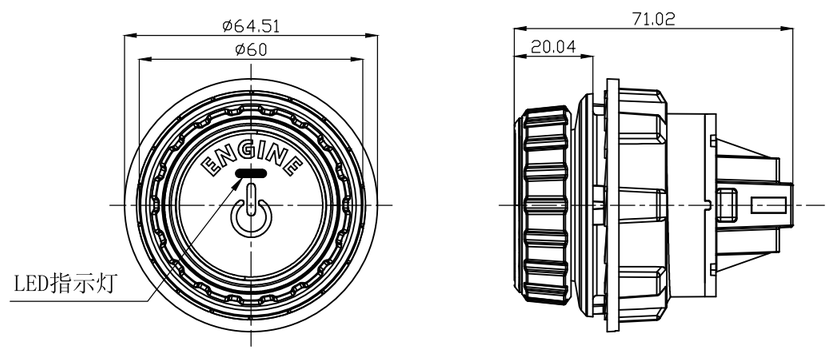

MQ65 SERIES COMMON SPECIFICATION

Rotational Torque	旋转力矩	300~700gf.cm
Pressure of switch	开关按压力	400~800gf
Rotational Life	旋转寿命	100,000 cycles Min

Resolution and Output signal

SERIES 系列	RESOLUTION 分解能力	DETENT 定位	Rotation direction 旋转方向	SIGNAL 信号	OUTPUT PHASE 输出波形
MQ65	12P	12	C.W (顺时针方向)	A(Terminal A-C)	OFF / ON
				B(Terminal B-C)	OFF / ON

MD158 Series

INTEGRATED MODULES

MODEL 品名	DIMENSIONS 尺寸	UNIT:mm

MD158060402T-CON

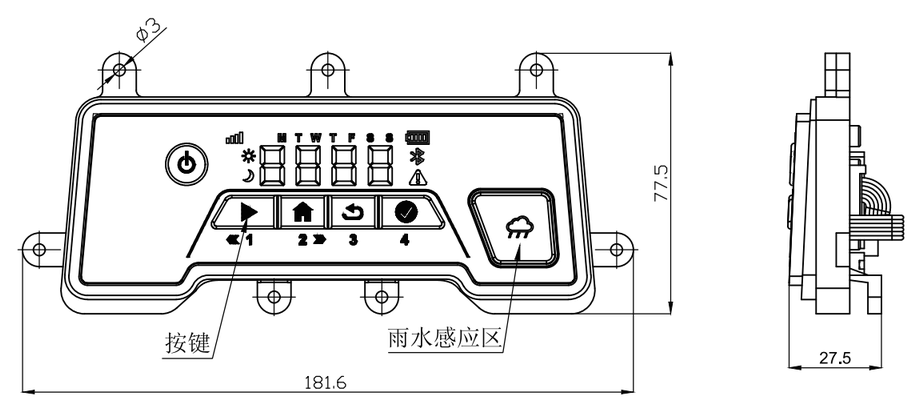

MQ158 SERIES COMMON SPECIFICATION

Pressure of switch	开关按压力	100~400gf
Switch Life	开关寿命	100,000 cycles Min

MG44/57 Series

INTEGRATED MODULES

MODEL 品名	DIMENSIONS 尺寸	UNIT:mm

MG440101CXX -HAR

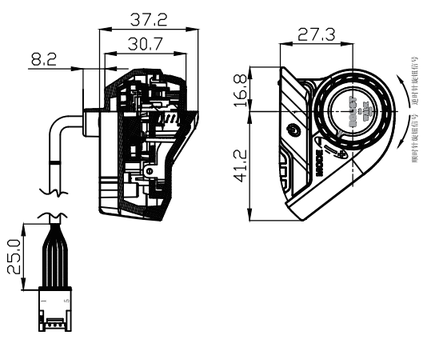

MG570102CXX-HAR

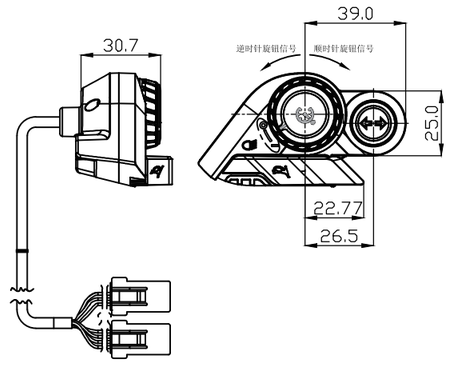

MG SERIES COMMON SPECIFICATION

Pressing pressure of steering	转向键开关按压力	250~450gf
Rotation torque of knob	旋钮旋转力矩	70~270 gf.cm
Press pressure of horn key	喇叭开关按压力	300~700gf
Pressing pressure of knob	旋钮开关按压力	300~700gf
Operating life of steering key	转向键按压寿命	40,000 cycles Min
Rotational life	旋钮旋转寿命	40,000 cycles Min
Operating life of horn key	喇叭键按压寿命	40,000 cycles Min
Operating life of knob	旋钮按压寿命	40,000 cycles Min

Rotary Slide Equalizer & Trimmer

COMMON SPECIFICATIONS

附录1 Appendix I

RESIDUAL RESISTANCE

残留电阻

UNIT: Ω

TAPER 线性 \ RESISTANCE(Ω) 阻值	500	1K	2K	5K	10K	20K	50K	100K	120K	150K	200K	220K	500K	1M	2M	Q/F S/H	RESIDUAL RESISTANCE
A Taper	10/10	10/10	10/10	10/20	10/20	10/20	10/20	10/20	10/20	10/20	10/20	10/20	10/20	10/20	10/20	+10/+20	$R_{1,2}$ / $R_{2,3}$
B Taper	10/10	10/10	10/10	10/10	10/10	10/10	10/20	10/20	10/20	10/20	10/20	10/20	10/20	10/20	10/20	+10/+20	$R_{1,2}$ / $R_{2,3}$
C Taper	10/10	10/10	10/10	20/10	20/10	20/10	20/10	20/10	20/10	20/10	20/10	20/10	20/10	20/10	20/10	+20/+10	$R_{1,2}$ / $R_{2,3}$

NOTE:

Q/F/S/H: Silver-plating against sulphides / 银层加抗硫化。

T:Fully against sulphides / 全抗硫化。

RESISTANCE TAPERS AND VOLTAGE RATE($\frac{V_{1-2}}{V_{1-3}}$X100%) AT MEASURING POSITION

线性与阻值比率关系

TAPERS / 线性		JIS 标准	EFFECTIVE ROTATION ANGLE & EFFECTIVE TRAVEL / 有效旋转角度或行程							
			10%	20%	30%	50%	60%	70%	80%	90%
A	05A	G	–	–	–	2-10	–	–	–	–
	10A	D	–	–	–	6-15	–	–	–	–
	15A	A	–	–	–	10-22	–	–	–	–
	20A	–	–	–	–	15-27	–	–	–	–
	25A	K	–	–	–	19-33	–	–	–	–
	30A	–	–	–	–	24-38	–	–	–	–
B	B	B	–	–	–	42-58	–	–	–	–
	1B	–	0.2-4	–	–	42-58	–	–	–	96-99.8
	2B	–	–	2-10	–	42-58	–	–	90-98	–
	3B	–	–	1-7	–	42-58	–	–	93-99	–
	4B	W	–	–	5-15	42-58	–	85-95	–	–
	5B	–	–	–	1-7	42-58	–	93-99	–	–
*C	05C	–	–			2-10	–	–		
	10C	RD	–			6-15	–	–		
	15C	C	–			10-22	–	–		
	20C	–	–			15-27	–	–		
	25C	E	–			19-33	–	–		
	30C	–	–			24-38	–	–		

*C TAPER IS MEASURED $(V_{2\sim3})/(V_{1\sim3})*100\%$

Rotary,Slide Equalizer & Trimmer(only Be Applicable To Potentiometer)

STANDARD RESISTANCE TAPER(电位器专用）

TAPERS (A) SERIES

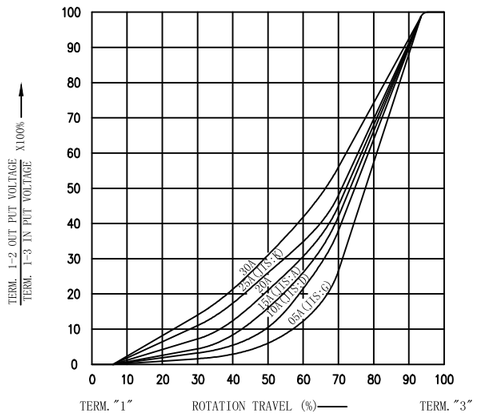

TAPERS (A&C) WITH 50% TAP

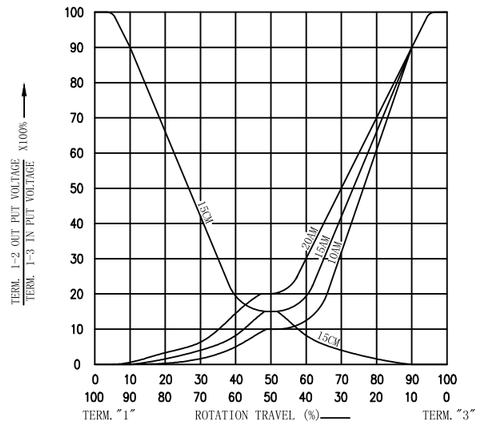

TAPERS (B) SERIES

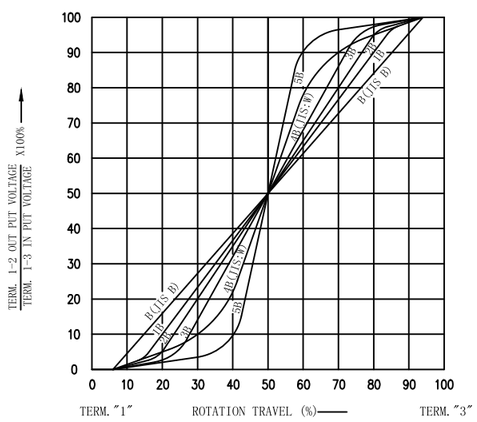

TAPERS (B) WITH 50% TAP

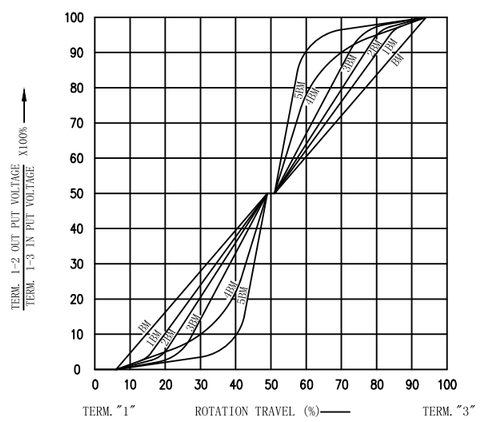

TAPERS (C) SERIES

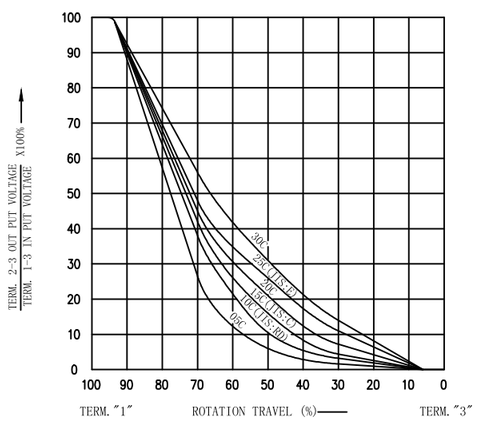

TAPERS (M & N)

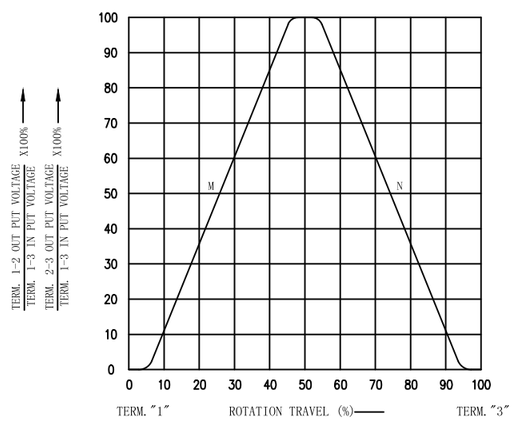

Rotary Slide Equalizer & Trimmer

COMMON SPECIFICATIONS

ABBREVIATION OF NOMINAL TOTAL RESISTANCE

阻值简码表

TOTAL RESISTANCE VALUE 总阻值	MARKING 代码	TOTAL RESISTANCE VALUE 总阻值	MARKING 代码
100Ω	101	20KΩ	203
200Ω	201	22KΩ	223
300Ω	301	30KΩ	303
500Ω	501	47KΩ	473
1KΩ	102	50KΩ	503
2KΩ	202	100KΩ	104
3KΩ	302	200KΩ	204
3.3KΩ	332	250KΩ	254
4.7KΩ	472	300KΩ	304
5KΩ	502	500KΩ	504
6.8KΩ	682	1MΩ	105
10KΩ	103	2MΩ	205

AVAILABLE COLOUR CODE

颜色代号表

Colour / 颜色	Code / 代号	RC Knob / 旋盘	SN Colour point / 颜色点	SC Colour point / 颜色点	SA Colour point / 颜色点
Red / 红色	R01	◉	◉	◉	◉
Green / 绿色	N01	◉			
Orange / 橙色	E01	◉			
Black / 黑色	B01	◉			
Grey / 灰色	G01	◉			
White / 白色	W01	◉			
Blue / 蓝色	U01				